LOT 111
DUNES OF AMELIA PHASE 2
PBK 8/280

PEREZ JONATHAN/MILLIGAN-PEREZ KIMBERLY ELAINE
2804 TURTLE SHORE DRIVE
FERNANDINA BEACH, FL 32034

2025

00-00-30-044D-0111-0000

BUILDING CHARACTERISTICS

ELEMENT	CD	CONSTRUCTION
Exterior Wall	10	ABOVE AVG 100
Roof Structur	08	IRREGULAR 100
Roof Cover	03	COMP SHNGL 100
Interior Wall	05	DRYWALL 100
Interior Floo	11	CLAY TILE 60
Interior Floo	12	HARDWOOD 40
Air Condition	03	CENTRAL 100
Heating Type	04	AIR DUCTED 100
Bedrooms		5 100
Bathrooms		4 100
Frame	02	WOOD FRAME 100
Stories	2.	2. 100
Units		0 100
Occupancy	00	NONE 100
Quality	06	Quality Level 06
DOR CODE	0100	SINGLE FAMILY
MAP NUM		MKT AREA 01
NEIGHBORHOOD/LOC	2121.100	

AREA TYPE	TOTAL GROSS AREA	PCT OF BASE	YEAR	TOT ADJ AREA	SUBAREA MARKET VALUE
BAS	1,557	100	2018	1,557	260,350
FGR	456	55	2018	251	41,971
FOP	90	30	2018	27	4,515
FOP	102	30	2018	31	5,184
FOP	300	30	2018	90	15,049
FUS	1,086	100	2018	1,086	181,593
TOTALS	3,591			3,042	508,660

MARKET ADJUSTMENTS

TYPE	MDL	EFF. AREA	TOT ADJ PTS	EFF. BASE RATE	REPL. COST NEW	AYB	EYB	ECON	FNCT		NORM	% COND
0900	01	3,042	129.9224	171.50	521,703	2018	2018	0	0	0	2.50	97.50

1 SNGL FAM – 0% - 2023 Heated Area: 2643 HX Base Yr

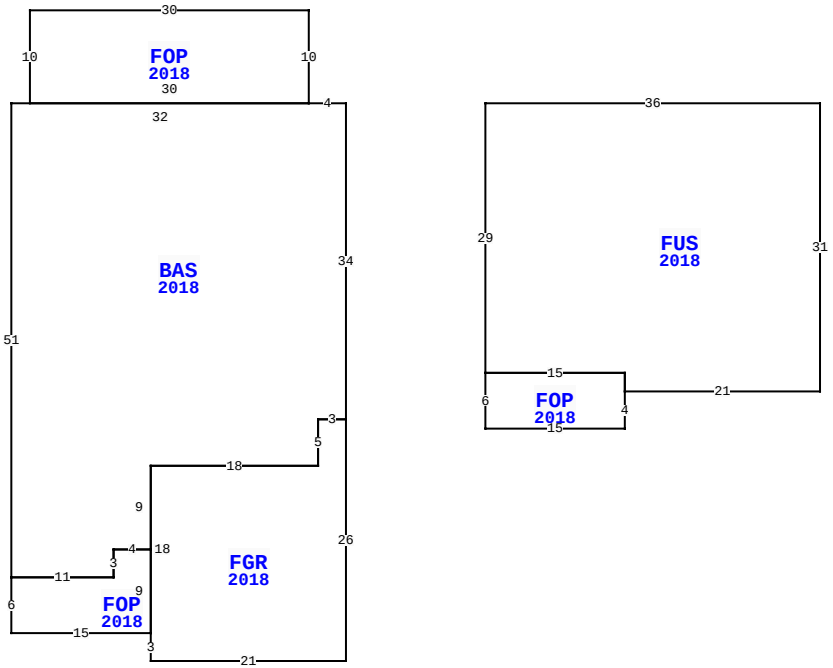

BLD DATE		LGL DATE	
XF DATE		LAND DATE	03/31/2025 MLU
INC DATE		AG DATE	

2804 TURTLE SHORES DR, FERNANDINA BEACH

NASSAU COUNTY PROPERTY

PAGE 1 of 1 2

VALUATION SUMMARY

VALUATION BY	STANDARD
Tax Group: 2	Tax Dist:
BUILDING MARKET VALUE	508,660
TOTAL MARKET OB/XF VALUE	53,856
TOTAL LAND VALUE - MARKET	165,000
TOTAL MARKET VALUE	727,516
SOH/AGL Deduction	0
ASSESSED VALUE	727,516
TOTAL EXEMPTION VALUE	0
BASE TAXABLE VALUE	727,516
TOTAL JUST VALUE	727,516
NCON VALUE	0
INCOME VALUE	
PREVIOUS YEAR MKT VALUE	689,716

PERMIT NUM	DESCRIPTION	AMT	ISSUED
20190652	SCRN ENCL	0	11/25/2019
20190579	SWIM POOL	0	10/29/2019
20181756	CO ISSUED	0	01/14/2019
20181756	NEW CONSTR	346,309	05/23/2018

SALES DATA

OFF RECORD Number	DATE	TYPE INST	Q U	V I	RSN CD	SALE PRICE
2544/1080	3/07/2022	WD	Q	I	01	750,000
GRANTOR: FEINSTEIN-TOWLI JAN R						
GRANTEE: PEREZ JONATHAN & KI						
2249/1291	1/15/2019	WD	Q	I	01	408,400
GRANTOR: NEW ATLANTIC BUILDERS						
GRANTEE: FEINSTEIN-TOWLI JAN						

BUILDING NOTES

BUILDING DIMENSIONS

BAS=[YR=2018] W4 FOP=[YR=2018] N10 W30 S10 E30$ W32 S51 FOP=[YR=2018] S6 E15 FGR=[YR=2018] S3 E21 N26 W3 S5 W18 S18$ N9 W4 S3 W11$ E11 N3 E4 N9 E18 N5 E3 N34$ PTR=E15 FUS=[YR=2018] E36 S31 W21 FOP=[YR=2018] S4 W15 N6 E15 S2$ N2 W15 N29$ W15 $.

EXTRA FEATURES

LN	OB/XF CODE	DESCRIPTION	BLD	CAP	L	W	UNITS	UT	Adj R	ADJ UNIT PRICE	ORIG COND	YEAR ON	YEAR ACTUAL	Q	% COND	OB/XF MKT VALUE	NOTES
1	0855	CONC PAVER	0	0	0	0	646.00	SF	7.00	7.00	100	2018	2018	3	97	4,386	
2	0855	CONC PAVER	0	0	0	0	36.00	SF	7.00	7.00	100	2018	2018	3	97	244	
3	0861	POOL GUNIT	0	0	0	0	338.00	SF	85.00	85.00	100	2020	2020	3	90	25,857	
4	0910	SCRN RM L	0	0	0	0	986.00	SF	15.00	15.00	100	2020	2020	3	86	12,719	
5	0855	CONC PAVER	0	0	0	0	648.00	SF	10.00	10.00	100	2020	2020	3	98	6,350	
6	0600	SUMMER KIT	0	0	0	0	1.00	UT	5,000.00	5,000.00	100	2020	2020	3	86	4,300	

LAND DESCRIPTION

TOTAL OB/XF 53,856

LN	USE CODE	CLS	LAND USE DESCRIPTION	CAP	RD	LOC ZONE	FRONT	DEPTH	TOT LND UTS	UNIT TYPE	DT	DPTH FACT	% COND	TOT ADJ	UNIT PRICE	ADJ UNIT PRICE	LAND VALUE	OTHER ADJUSTMENTS AND NOTES	YEAR	DENSITY	DECL	FRZ	YR	CONSRV
1	000100	C	RES	0		RLM	0.00	0.00	1.00	LT		1.00	1.00	1.00	165,000.00	165,000.00	165,000							

REVIEW DATE 12/08/2020 BY RK Total Acres: 0.00 Total Land Value: 165,000 Market: 0 Agricultural: 0 Common: 165,000 PRINTED 07/30/2025 BY SYS