LOT 48
DUNES OF AMELIA PHASE 1
PBK 8/88

SCOTT JEFFREY M
381 SARGASSO ST
FERNANDINA BEACH, FL 32034

2025

00-00-30-044D-0048-0000

NASSAU COUNTY PROPERTY

BUILDING CHARACTERISTICS

ELEMENT	CD	CONSTRUCTION
Exterior Wall	10	ABOVE AVG 100
Roof Structur	08	IRREGULAR 100
Roof Cover	03	COMP SHNGL 100
Interior Wall	05	DRYWALL 100
Interior Floo	11	CLAY TILE 60
Interior Floo	14	CARPET 40
Air Condition	03	CENTRAL 100
Heating Type	04	AIR DUCTED 100
Bedrooms		4 100
Bathrooms		3 100
Frame	02	WOOD FRAME 100
Stories	1.5	1.5 100
Units		0 100
Occupancy	00	NONE 100
Quality	06	Quality Level 06

DOR CODE 0100 SINGLE FAMILY
MAP NUM | MKT AREA 01
NEIGHBORHOOD/LOC 2121.00

AREA TYPE	TOTAL GROSS AREA	PCT OF BASE	YEAR	TOT ADJ AREA	SUBAREA MARKET VALUE
BAS	1,710	100	2018	1,710	291,069
FGR	460	55	2018	253	43,065
FOP	42	30	2018	13	2,213
FSP	232	40	2018	93	15,830
FUS	470	100	2018	470	80,002
STR	58	10	2018	6	1,021
TOTALS	2,972			2,545	433,198

MARKET ADJUSTMENTS

TYPE	MDL	EFF. AREA	TOT ADJ PTS	EFF. BASE RATE	REPL. COST NEW	AYB	EYB	ECON	FNCT		NORM	% COND
0900	01	2,545	132.2592	174.58	444,306	2018	2018	0	0	0	2.50	97.50

1 SNGL FAM – 100% - 2025 Heated Area: 2180 HX Base Yr 2025

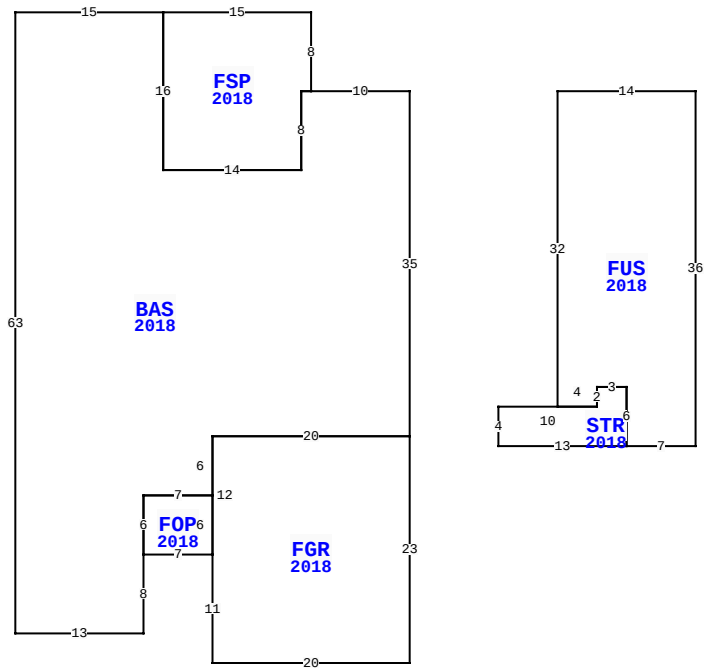

381 SARGASSO ST, FERNANDINA BEACH

BLD DATE		LGL DATE	
XF DATE		LAND DATE	03/31/2025 MLU
INC DATE		AG DATE	

VALUATION SUMMARY

VALUATION BY		STANDARD
Tax Group: 2	Tax Dist:	
BUILDING MARKET VALUE		433,198
TOTAL MARKET OB/XF VALUE		4,875
TOTAL LAND VALUE - MARKET		165,000
TOTAL MARKET VALUE		603,073
SOH/AGL Deduction		0
ASSESSED VALUE		603,073
TOTAL EXEMPTION VALUE	HX HB	50,722
BASE TAXABLE VALUE		552,351
TOTAL JUST VALUE		603,073
NCON VALUE		0
INCOME VALUE		
PREVIOUS YEAR MKT VALUE		567,199

PERMIT NUM	DESCRIPTION	AMT	ISSUED
20172314	CO ISSUED	0	02/23/2018
20172314	NEW CONSTR	274,798	07/28/2017

SALES DATA

OFF RECORD Number	DATE	TYPE INST	Q U	V I	RSN CD	SALE PRICE
2745/515	10/23/2024	WD	Q	I	01	690,000
GRANTOR: MARKOVIC ROBERT E LIV						
GRANTEE: SCOTT JEFFREY M						
2667/946	9/05/2023	WD	U	I	11	100
GRANTOR: SHENBERGER ASHLEY M						
GRANTEE: MARKOVIC ROBERT E L						

BUILDING NOTES

BUILDING DIMENSIONS

BAS=[YR=2018] W10 FSP=[YR=2018] N8 W15 S16 E14 N8 E1$ W1 S8 W14 N16 W15 S63 E13 N8 FOP=[YR=2018] E7 FGR=[YR=2018] S11 E20 N23 W20 S12$ N6 W7 S6$ N6 E7 N6 E20 N35$ PTR=E15 FUS=[YR=2018] E14 S36 W7 STR=[YR=2018] W13 N4 E10 N2 E3 S6$ N6 W3 S2 W4 N32$ W15$.

EXTRA FEATURES

LN	OB/XF CODE	DESCRIPTION	BLD	CAP	L	W	UNITS	UT	Adj R	ADJ UNIT PRICE	ORIG COND	YEAR ON	YEAR ACTUAL	Q	% COND	OB/XF MKT VALUE	NOTES
1	0855	CONC PAVER	0	100	0	0	652.00	SF	7.00	7.00	100	2018	2018	3	97	4,427	
2	0855	CONC PAVER	0	100	0	0	66.00	SF	7.00	7.00	100	2018	2018	3	97	448	

LAND DESCRIPTION

TOTAL OB/XF 4,875

LN	USE CODE	CLS	LAND USE DESCRIPTION	CAP	RD	LOC ZONE	FRONT	DEPTH	TOT LND UTS	UNIT TYPE	DT	DPTH FACT	% COND	TOT ADJ	UNIT PRICE	ADJ UNIT PRICE	LAND VALUE	OTHER ADJUSTMENTS AND NOTES	YEAR	DENSITY	DECL	FRZ	YR	CONSRV
1	000100	C	RES	100		RLM	0.00	0.00	1.00	LT		1.00	1.00	1.00	165,000.00	165,000.00	165,000							

REVIEW DATE 02/27/2024 BY KBA Total Acres: 0.00 Total Land Value: 165,000 Market: 0 Agricultural: 0 Common: 165,000 PRINTED 07/30/2025 BY SYS