LOT 7
PLANTATION HAMMOCK PBK 8/104

LUNGARINI GARY JOHN/ONOFRIO LUCIA A
850 SIMMONS RD
FERNANDINA BEACH, FL 32034

2025

00-00-30-044C-0007-0000

NASSAU COUNTY PROPERTY

BUILDING CHARACTERISTICS

ELEMENT	CD	CONSTRUCTION
Exterior Wall	17	CB STUCCO 60
Exterior Wall	10	ABOVE AVG 40
Roof Structur	08	IRREGULAR 100
Roof Cover	03	COMP SHNGL 100
Interior Wall	05	DRYWALL 100
Interior Floo	11	CLAY TILE 60
Interior Floo	14	CARPET 40
Air Condition	03	CENTRAL 100
Heating Type	04	AIR DUCTED 100
Bedrooms		4 100
Bathrooms		2.5 100
Frame	03	MASONRY 100
Stories	2.	2. 100
Units		0 100
Occupancy	00	NONE 100
Quality	06	Quality Level 06
DOR CODE	0100	SINGLE FAMILY
MAP NUM		MKT AREA 01
NEIGHBORHOOD/LOC	2123.00	

AREA TYPE	TOTAL GROSS AREA	PCT OF BASE	YEAR	TOT ADJ AREA	SUBAREA MARKET VALUE
BAS	1,739	100	2016	1,739	327,758
FGR	816	55	2016	449	84,625
FOP	144	30	2016	43	8,105
FOP	177	30	2016	53	9,989
FUS	748	100	2016	748	140,979
STR	33	10	2016	3	566
UST	52	45	2016	23	4,335
TOTALS	3,709			3,058	576,356

MARKET ADJUSTMENTS

TYPE	MDL	EFF. AREA	TOT ADJ PTS	EFF. BASE RATE	REPL. COST NEW	AYB	EYB	ECON	FNCT		NORM	% COND
0500	01	3,058	123.9976	195.92	599,123	2016	2016	0	0	0	3.80	96.20

1 SFR CUST – 100% - 2021 Heated Area: 2487 HX Base Yr 2021

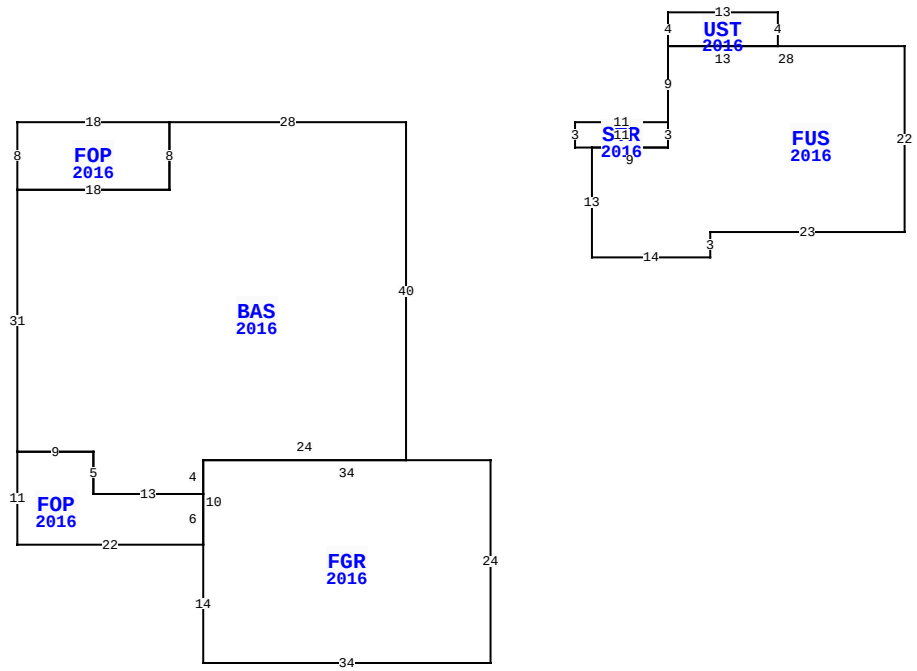

850 SIMMONS RD, FERNANDINA BEACH

BLD DATE		LGL DATE	
XF DATE		LAND DATE	03/14/2024 MLU
INC DATE		AG DATE	

VALUATION SUMMARY

VALUATION BY		STANDARD
Tax Group: 2	Tax Dist:	
BUILDING MARKET VALUE		576,356
TOTAL MARKET OB/XF VALUE		11,009
TOTAL LAND VALUE - MARKET		160,000
TOTAL MARKET VALUE		747,365
SOH/AGL Deduction		283,653
ASSESSED VALUE		463,712
TOTAL EXEMPTION VALUE	HX HB	50,722
BASE TAXABLE VALUE		412,990
TOTAL JUST VALUE		747,365
NCON VALUE		0
INCOME VALUE		
PREVIOUS YEAR MKT VALUE		721,142

PERMIT NUM	DESCRIPTION	AMT	ISSUED
2025-0944	20'X13' SCRN RM	11,500	03/13/2025
B1531269	CO ISSUED	0	10/14/2016
B1531269	NEW CONSTR	324,408	10/12/2015

SALES DATA

OFF RECORD Number	DATE	TYPE INST	Q U	V I	RSN CD	SALE PRICE
2403/1676	10/26/2020	WD	Q	I	01	488,000
GRANTOR: SNYDER WILLIAM A & LI						
GRANTEE: LUNGARINI GARY JOHN						
2188/1887	4/04/2018	WD	Q	I	01	400,000
GRANTOR: MAGNOLIA HOMES INC						
GRANTEE: SNYDER WILLIAM A &						

BUILDING NOTES

BUILDING DIMENSIONS

BAS=[YR=2016] W28 FOP=[YR=2016] W18 S8 E18 N8$ S8 W18 S31 FOP=[YR=2016] S11 E22 FGR=[YR=2016] S14 E34 N24 W34 S10$ N6 W13 N5 W9$ E9 S5 E13 N4 E24 N40$ PTR=E20 STR=[YR=2016] E11 FUS=[YR=2016] N9 UST=[YR=2016] N4 E13 S4 W13$ E28 S22 W23 S3 W14 N13 E9 N3$ S3 W11 N3$ W20$.

EXTRA FEATURES

LN	OB/XF CODE	DESCRIPTION	BLD	CAP	L	W	UNITS	UT	Adj R	ADJ UNIT PRICE	ORIG COND	YEAR ON	YEAR ACTUAL	Q	% COND	OB/XF MKT VALUE	NOTES
1	0810	CONCRETE A	0	100	0	0	666.00	SF	6.50	6.50	100	2016	2016	3	95	4,113	
2	0855	CONC PAVER	0	100	39	3	117.00	SF	7.00	7.00	100	2016	2016	3	95	778	
3	0855	CONC PAVER	0	100	0	0	920.00	SF	7.00	7.00	100	2016	2016	3	95	6,118	

LAND DESCRIPTION

TOTAL OB/XF 11,009

LN	USE CODE	CLS	LAND USE DESCRIPTION	CAP	RD	LOC ZONE	FRONT	DEPTH	TOT LND UTS	UNIT TYPE	DT	DPTH FACT	% COND	TOT ADJ	UNIT PRICE	ADJ UNIT PRICE	LAND VALUE	OTHER ADJUSTMENTS AND NOTES	YEAR	DENSITY	DECL	FRZ	YR	CONSRV
1	000100	C	RES	100		R-1	0.00	0.00	1.00	LT		1.00	1.00	1.00	160,000.00	160,000.00	160,000							

REVIEW DATE 07/10/2025 BY HS Total Acres: 0.00 Total Land Value: 160,000 Market: 0 Agricultural: 0 Common: 160,000 PRINTED 07/30/2025 BY SYS