PT OF LOT 23 IN OR 2705/1074
OCEAN BREEZE SUB PBK 1/11

FISCHER FRANK & LUZ L/E/
1637 SIMMONS ROAD
FERNANDINA BEACH, FL 32034

2025

00-00-30-044A-0023-0020

BUILDING CHARACTERISTICS

ELEMENT	CD	CONSTRUCTION
Exterior Wall	10	ABOVE AVG 60
Exterior Wall	20	FACE BRICK 40
Roof Structur	08	IRREGULAR 100
Roof Cover	03	COMP SHNGL 100
Interior Wall	05	DRYWALL 100
Interior Floo	11	CLAY TILE 70
Interior Floo	13	LVT/LAMNT 30
Air Condition	03	CENTRAL 100
Heating Type	04	AIR DUCTED 100
Bedrooms		3 100
Bathrooms		3.5 100
Frame	02	WOOD FRAME 100
Stories	1.5	1.5 100
Units		0 100
Occupancy	00	NONE 100
Quality	05	Quality Level 05
DOR CODE	0100	SINGLE FAMILY
MAP NUM		MKT AREA 02
NEIGHBORHOOD/LOC	2021.00	

AREA TYPE	TOTAL GROSS AREA	PCT OF BASE	YEAR	TOT ADJ AREA	SUBAREA MARKET VALUE
BAS	1,805	100	1993	1,805	171,930
BAS	33	100	2007	33	3,144
BAS	104	100	2007	104	9,907
BAS	260	100	2007	260	24,766
BAS	475	100	2007	475	45,245
FGR	1,031	55	2007	567	54,008
FOP	60	30	2007	18	1,714
FOP	96	30	2007	29	2,762
FOP	68	30	2013	20	1,905
FSP	400	40	2013	160	15,240
TOTALS	5,449			4,458	424,634

MARKET ADJUSTMENTS

TYPE	MDL	EFF. AREA	TOT ADJ PTS	EFF. BASE RATE	REPL. COST NEW	AYB	EYB	ECON	FNCT		NORM	% COND
0100	01	4,458	114.9016	114.90	512,224	1979	1995	0	0	0	17.10	82.90

1 SINGLE FAM – 100% - 2004 Heated Area: 3565 HX Base Yr 2004

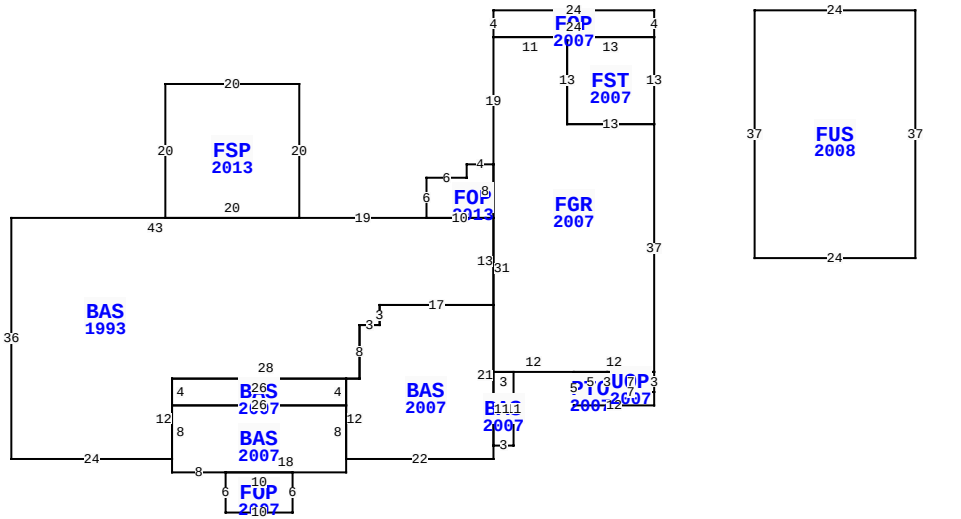

** This building has 14 Sub-Areas

1637 SIMMONS RD, FERNANDINA BEACH

BLD DATE		LGL DATE	
XF DATE		LAND DATE	04/29/2025 MLU
INC DATE		AG DATE	

NASSAU COUNTY PROPERTY

PAGE 1 of 2 8

VALUATION SUMMARY

VALUATION BY		STANDARD
Tax Group: 8	Tax Dist:	
BUILDING MARKET VALUE		434,604
TOTAL MARKET OB/XF VALUE		4,024
TOTAL LAND VALUE - MARKET		355,635
TOTAL MARKET VALUE		794,263
SOH/AGL Deduction		479,661
ASSESSED VALUE		314,602
TOTAL EXEMPTION VALUE	HX HB	50,722
BASE TAXABLE VALUE		263,880
TOTAL JUST VALUE		794,263
NCON VALUE		9,970
INCOME VALUE		
PREVIOUS YEAR MKT VALUE		749,201

PERMIT NUM	DESCRIPTION	AMT	ISSUED
B240006929	18X25 STL BUIL	28,885	06/11/2024
B21502	REMODEL	15,000	06/01/2008
P13281	REMODEL	0	06/01/2008
M13061	MECH OTHER	0	06/01/2007
B0617003	ADDITION	180,000	09/01/2006
M11755	MECH OTHER	0	07/01/2006

SALES DATA

OFF RECORD Number	DATE	TYPE INST	Q / U	V / I	RSN CD	SALE PRICE
2705/1074	4/10/2024	LE	U	I	11	100
GRANTOR: FISCHER FRANK & LUZ						
GRANTEE: FISCHER NATHANIEL G						
1141/0905	5/30/2003	WD	Q	I		232,000
GRANTOR: LEMMOND DONNA D						
GRANTEE: FISCHER FRANK & LUZ						

BUILDING NOTES

BUILDING DIMENSIONS

FOP=[YR=2007] W24 S4 FGR=[YR=2007] S19 FOP=[YR=2013] W4 S2 W6 S6 BAS=[YR=1993] W19 FSP=[YR=2013] N20 W20 S20 E20$ W43 S36 E24 BAS=[YR=2007] S2 E8 FOP=[YR=2007] S6 E10 N6 W10 $ E18 N2 BAS=[YR=2007] E22 N2 BAS=[YR=2007] E3 N11 W3 S11 $ N21 W17 S3 W3 S8 W2 S12 $ N8 BAS=[YR=2007] N4 W26 S4 E26 $ W26 S8 $ N12 E28 N8 E3 N3 E17 N13 W10 $ E10 N8 $ S31 E12 PTO=[YR=2007] S5 E12 N2 UOP=[YR=2007] N3 W7 S3 E7 $ W7 N3 W5 $ E12 N37 FST=[YR=2007] N13 W13 S13 E13 $ W13 N13 W11 $ E24 N4 $ PTR= E15 FUS=[YR=2008] E24 S37 W24 N37 $ W15 $.

EXTRA FEATURES

LN	OB/XF CODE	DESCRIPTION	BLD	CAP	L	W	UNITS	UT	Adj R	ADJ UNIT PRICE	ORIG COND	YEAR ON	YEAR ACTUAL	Q	% COND	OB/XF MKT VALUE	NOTES
1	0500	FP-PRE FAB	0	100	0	0	1.00	UT	3,500.00	3,500.00	100	1979	1979	3	42	1,470	
2	0810	CONCRETE A	0	100	0	0	390.00	SF	6.50	6.50	100	2007	2007	3	87	2,205	
3	0810	CONCRETE A	0	100	4	4	16.00	SF	6.50	6.50	100	2007	2007	3	87	90	
4	0940	SHEDS/PORT	0	100	8	4	32.00	SF	30.00	30.00	100	2007	2007	3	27	259	

LAND DESCRIPTION

TOTAL OB/XF 4,024

LN	USE CODE	CLS	LAND USE DESCRIPTION	CAP	RD	LOC ZONE	FRONT	DEPTH	TOT LND UTS	UNIT TYPE	DT	DPTH FACT	% COND	TOT ADJ	UNIT PRICE	ADJ UNIT PRICE	LAND VALUE	OTHER ADJUSTMENTS AND NOTES	YEAR	DENSITY	DECL	FRZ	YR	CONSRV
1	000100	C	RES	100		RSF-2	0.00	0.00	1.00	AC		1.00	1.00	1.00	315,000.00	315,000.00	315,000							
2	000100	C	RES	100		RSF-2	0.00	0.00	0.13	AC		1.00	1.00	1.00	315,000.00	315,000.00	40,635							

REVIEW DATE 12/16/2024 BY HS Total Acres: 1.13 Total Land Value: 355,635 Market: 0 Agricultural: 0 Common: 355,635 PRINTED 07/30/2025 BY SYS

PT OF LOT 23 IN OR 2705/1074
OCEAN BREEZE SUB PBK 1/11

FISCHER FRANK & LUZ L/E/
1637 SIMMONS ROAD
FERNANDINA BEACH, FL 32034

2025

00-00-30-044A-0023-0020

NASSAU COUNTY PROPERTY

BUILDING CHARACTERISTICS

ELEMENT	CD	CONSTRUCTION
Exterior Wall	25	MOD METAL 100
Roof Structur	10	STEEL FRME 100
Roof Cover	12	MODULAR MT 100
Interior Wall	07	NONE 100
Interior Floo	03	CONC FINSH 100
Air Condition	01	NONE 100
Heating Type	01	NONE 100
Bedrooms		0 100
Bathrooms		0 100
Frame	05	STEEL 100
Quality	05	Quality Level 05
DOR CODE	0100	SINGLE FAMILY
MAP NUM		MKT AREA 02
NEIGHBORHOOD/LOC	2021.00	

AREA TYPE	TOTAL GROSS AREA	PCT OF BASE	YEAR	TOT ADJ AREA	SUBAREA MARKET VALUE
BAS	450	100	2025	450	9,970
TOTALS	450			450	9,970

MARKET ADJUSTMENTS

TYPE	MDL	EFF. AREA	TOT ADJ PTS	EFF. BASE RATE	REPL. COST NEW	AYB	EYB	ECON	FNCT		NORM	% COND
6500	01	450	60.5000	22.38	10,071	2024	2024	0	0	0	1.00	99.00

2 GARAGE RES – 100% - 2025 Heated Area: 450 HX Base Yr 2004

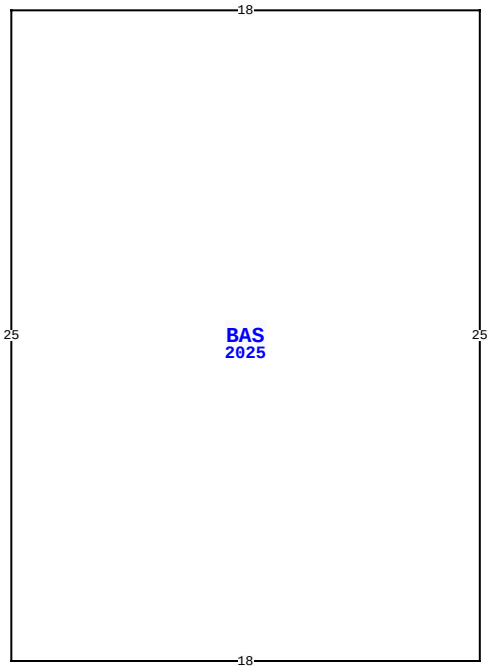

1637 SIMMONS RD, FERNANDINA BEACH

BLD DATE		LGL DATE	
XF DATE		LAND DATE	04/29/2025 MLU
INC DATE		AG DATE	

VALUATION SUMMARY

VALUATION BY		STANDARD
Tax Group: 8	Tax Dist:	
BUILDING MARKET VALUE		434,604
TOTAL MARKET OB/XF VALUE		4,024
TOTAL LAND VALUE - MARKET		355,635
TOTAL MARKET VALUE		794,263
SOH/AGL Deduction		479,661
ASSESSED VALUE		314,602
TOTAL EXEMPTION VALUE	HX HB	50,722
BASE TAXABLE VALUE		263,880
TOTAL JUST VALUE		794,263
NCON VALUE		9,970
INCOME VALUE		
PREVIOUS YEAR MKT VALUE		749,201

PERMIT NUM	DESCRIPTION	AMT	ISSUED
R08844	REPAIR/RRF	4,200	01/01/2006
P10635	OTHER	0	01/01/2006

SALES DATA

OFF RECORD Number	DATE	TYPE INST	Q U	V I	RSN CD	SALE PRICE
2705/1074	4/10/2024	LE	U	I	11	100
GRANTOR: FISCHER FRANK & LUZ						
GRANTEE: FISCHER NATHANIEL G						
1141/0905	5/30/2003	WD	Q	I		232,000
GRANTOR: LEMMOND DONNA D						
GRANTEE: FISCHER FRANK & LUZ						

BUILDING NOTES

BUILDING DIMENSIONS

BAS=[YR=2025;ORIG=50,10] E18 S25 W18 N25 $
.

EXTRA FEATURES

L N	OB/XF CODE	DESCRIPTION	BLD	CAP	L	W	UNITS	UT	Adj R	ADJ UNIT PRICE	ORIG COND	YEAR ON	YEAR ACTUAL	Q	% COND	OB/XF MKT VALUE	NOTES

LAND DESCRIPTION

TOTAL OB/XF 0

L N	USE CODE	CLS	LAND USE DESCRIPTION	CAP	R D	LOC ZONE	FRONT	DEPTH	TOT LND UTS	UNIT TYPE	D T	DPTH FACT	% COND	TOT ADJ	UNIT PRICE	ADJ UNIT PRICE	LAND VALUE	OTHER ADJUSTMENTS AND NOTES	YEAR	DENSITY	DECL	FRZ	YR	CONSRV

REVIEW DATE 12/16/2024 BY HS Total Acres: 1.13 Total Land Value: 355,635 Market: 0 Agricultural: 0 Common: 355,635 PRINTED 07/30/2025 BY SYS