LOT 18
PDSTRIAN ESMT PT OR 1179/1730
ISLESWORTH PB 6/300

SPRATTO MILES ANTHONY & SINEAD
96061 JAMAICAN CT
FERNANDINA BEACH, FL 32034

2025

00-00-30-0315-0018-0000

NASSAU COUNTY PROPERTY

BUILDING CHARACTERISTICS

ELEMENT	CD	CONSTRUCTION
Exterior Wall	16	WD FR STUC 100
Roof Structur	03	GABLE/HIP 100
Roof Cover	03	COMP SHNGL 100
Interior Wall	05	DRYWALL 100
Interior Floo	14	CARPET 70
Interior Floo	11	CLAY TILE 30
Air Condition	03	CENTRAL 100
Heating Type	04	AIR DUCTED 100
Bedrooms		5 100
Bathrooms		3.5 100
Frame	02	WOOD FRAME 100
Stories	2.	2. 100
Units		0 100
Occupancy	00	NONE 100
Quality	03	Quality Level 03
DOR CODE	0100	SINGLE FAMILY
MAP NUM		MKT AREA 02
NEIGHBORHOOD/LOC	2027.00	

AREA TYPE	TOTAL GROSS AREA	PCT OF BASE	YEAR	TOT ADJ AREA	SUBAREA MARKET VALUE
BAS	1,568	100	2004	1,568	199,445
FGR	483	55	2004	266	33,835
FOP	35	30	2004	10	1,272
FSP	236	40	2011	94	11,957
FUS	1,061	100	2004	1,061	134,956
TOTALS	3,383			2,999	381,464

MARKET ADJUSTMENTS

TYPE	MDL	EFF. AREA	TOT ADJ PTS	EFF. BASE RATE	REPL. COST NEW	AYB	EYB	ECON	FNCT		NORM	% COND
0900	01	2,999	107.0660	141.33	423,849	2004	2004	0	0	0	10.00	90.00

1 SNGL FAM – 100% - 2024 Heated Area: 2629 HX Base Yr 2024

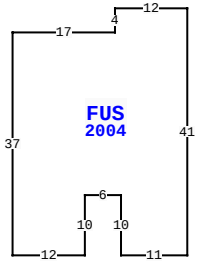

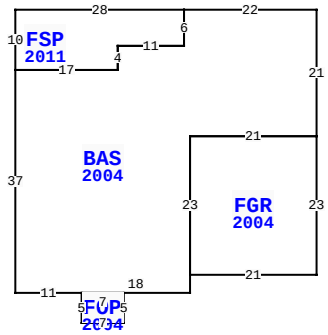

96061 JAMAICAN CT, FERNANDINA BEACH

BLD DATE	03/03/2023 NW	LGL DATE	
XF DATE		LAND DATE	04/29/2025 MLU
INC DATE		AG DATE	

VALUATION SUMMARY

VALUATION BY		STANDARD
Tax Group: 8	Tax Dist:	
BUILDING MARKET VALUE		381,464
TOTAL MARKET OB/XF VALUE		5,667
TOTAL LAND VALUE - MARKET		250,000
TOTAL MARKET VALUE		637,131
SOH/AGL Deduction		207,604
ASSESSED VALUE		429,527
TOTAL EXEMPTION VALUE	HX HB	50,722
BASE TAXABLE VALUE		378,805
TOTAL JUST VALUE		637,131
NCON VALUE		0
INCOME VALUE		
PREVIOUS YEAR MKT VALUE		568,961

PERMIT NUM	DESCRIPTION	AMT	ISSUED
B250002771	19'6" X 9'8" SCRN	6,355	03/18/2025
B0412340	NEW CONSTR	273,570	02/01/2004

SALES DATA

OFF RECORD Number	DATE	TYPE INST	Q U	V I	RSN CD	SALE PRICE
2645/1938	5/16/2023	WD	Q	I	02	739,000
GRANTOR: BUCK SARAH H						
GRANTEE: SPRATTO MILES ANTHO						
2292/0289	7/19/2019	WD	Q	I	01	410,000
GRANTOR: ARCENEAUX VICTOR J &						
GRANTEE: BUCK SARAH H						

BUILDING NOTES

BUILDING DIMENSIONS

BAS=[YR=2004] W22 FSP=[YR=2011] W28 S10 E17 N4 E11 N6$ S6 W11 S4 W17 S37 E11 FOP=[YR=2004] S5 E7 N5 W7$ E18 N3
FGR=[YR=2004] E21 N23 W21 S23 $ N23 E21 N21$ PTR=N15
FUS=[YR=2004] N37 E17 N4 E12 S41 W11 N10 W6 S10 W12$ S15$.

EXTRA FEATURES

LN	OB/XF CODE	DESCRIPTION	BLD	CAP	L	W	UNITS	UT	Adj R	ADJ UNIT PRICE	ORIG COND	YEAR ON	YEAR ACTUAL	Q	% COND	OB/XF MKT VALUE	NOTES
1	0500	FP-PRE FAB	0	100	0	0	1.00	UT	3,500.00	3,500.00	100	2004	2004	3	87	3,045	
2	0811	CONCRETE B	0	100	0	0	540.00	SF	5.20	5.20	100	2004	2004	3	83	2,331	
3	0810	CONCRETE A	0	100	18	3	54.00	SF	6.50	6.50	100	2004	2004	3	83	291	

LAND DESCRIPTION

TOTAL OB/XF 5,667

LN	USE CODE	CLS	LAND USE DESCRIPTION	CAP	RD	LOC ZONE	FRONT	DEPTH	TOT LND UTS	UNIT TYPE	DT	DPTH FACT	% COND	TOT ADJ	UNIT PRICE	ADJ UNIT PRICE	LAND VALUE	OTHER ADJUSTMENTS AND NOTES	YEAR	DENSITY	DECL	FRZ	YR	CONSRV
1	000100	C	RES	100		RSF-2	0.00	0.00	1.00	LT		1.00	1.00	1.00	250,000.00	250,000.00	250,000							

REVIEW DATE 07/10/2025 BY HS Total Acres: 0.00 Total Land Value: 250,000 Market: 0 Agricultural: 0 Common: 250,000 PRINTED 07/30/2025 BY SYS