LOTS 11 & 13,
LOT 9 (EX PT IN OR 2753/154 & OR
HIGHWAY ESTATES PB 3/9

NEW ATLANTIC BUILDERS INC
5875 MINING TERRACE STE 206
JACKSONVILLE, FL 32257

2025

00-00-30-0290-0011-0000

BUILDING CHARACTERISTICS

ELEMENT	CD	CONSTRUCTION
Exterior Wall	31	HARDIE BRD 100
Roof Structur	03	GABLE/HIP 100
Roof Cover	03	COMP SHNGL 100
Interior Wall	05	DRYWALL 100
Interior Floo	13	LVT/LAMNT 70
Interior Floo	14	CARPET 30
Air Condition	03	CENTRAL 100
Heating Type	04	AIR DUCTED 100
Bedrooms		4 100
Bathrooms		3 100
Frame	02	WOOD FRAME 100
Stories	1.	1. 100
Quality	05	Quality Level 05
DOR CODE	0100	SINGLE FAMILY
MAP NUM		MKT AREA 02
NEIGHBORHOOD/LOC	2021.00	

AREA TYPE	TOTAL GROSS AREA	PCT OF BASE	YEAR	TOT ADJ AREA	SUBAREA MARKET VALUE
BAS	2,525	100	2025	2,525	455,409
FGR	449	55	2025	247	44,549
FOP	52	30	2025	16	2,886
FOP	240	30	2025	72	12,986
TOTALS	3,266			2,860	515,830

MARKET ADJUSTMENTS

TYPE	MDL	EFF. AREA	TOT ADJ PTS	EFF. BASE RATE	REPL. COST NEW	AYB	EYB	ECON	FNCT		NORM	% COND
0500	01	2,860	114.1536	180.36	515,830	2024	2024	0	0	0	0.00	100.00

1 SFR CUST – 0% - 2025 Heated Area: 2525 HX Base Yr

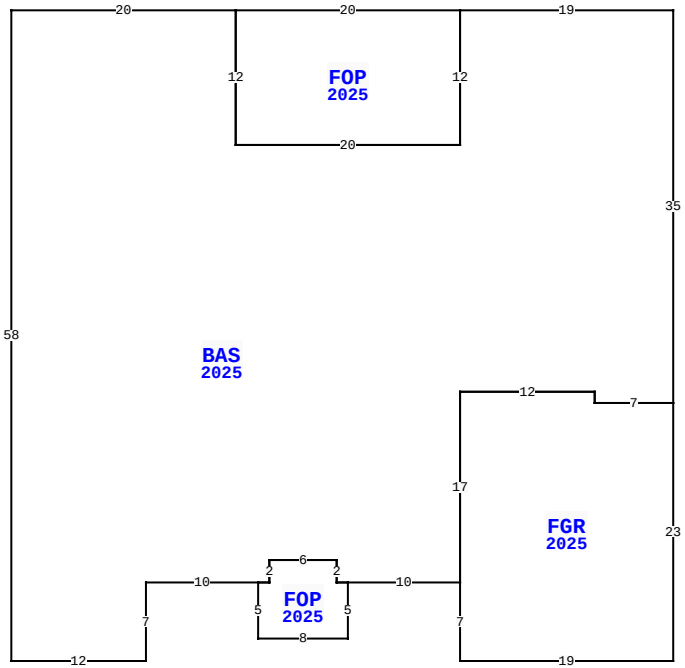

2646 BAILEY RD, FERNANDINA BEACH

BLD DATE		LGL DATE	
XF DATE		LAND DATE	04/29/2025 MLU
INC DATE		AG DATE	

NASSAU COUNTY PROPERTY

PAGE 1 of 2 8

VALUATION SUMMARY

VALUATION BY	STANDARD
Tax Group: 8	Tax Dist:
BUILDING MARKET VALUE	1,092,226
TOTAL MARKET OB/XF VALUE	52,280
TOTAL LAND VALUE - MARKET	370,125
TOTAL MARKET VALUE	1,514,631
SOH/AGL Deduction	0
ASSESSED VALUE	1,514,631
TOTAL EXEMPTION VALUE	0
BASE TAXABLE VALUE	1,514,631
TOTAL JUST VALUE	1,514,631
NCON VALUE	1,144,506
INCOME VALUE	
PREVIOUS YEAR MKT VALUE	

PERMIT NUM	DESCRIPTION	AMT	ISSUED

SALES DATA

OFF RECORD Number	DATE	TYPE INST	Q U	V I	RSN CD	SALE PRICE
2612/1341	1/06/2023	WD	Q	V	05	1,140,000

GRANTOR: PATRIOT RIDGE LLP

GRANTEE: NEW ATLANTIC BUILDE

BUILDING NOTES

BUILDING DIMENSIONS

BAS=[YR=2025;ORIG=20,60] N58 E20 S12 E20 N12 E19 S35 W7 N1 W12 S17 W10 W1 N2 W6 S2 W1 W10 S7 W12 $
FGR=[YR=2025;ORIG=79,37] S23 W19 N7 N17 E12 S1 E7 $
FOP=[YR=2025;ORIG=42,53] S5 E8 N5 W1 N2 W6 S2 W1 $
FOP=[YR=2025;ORIG=40,2] E20 S12 W20 N12 $
.

EXTRA FEATURES

LN	OB/XF CODE	DESCRIPTION	BLD	CAP	L	W	UNITS	UT	Adj R	ADJ UNIT PRICE	ORIG COND	YEAR ON	YEAR ACTUAL	Q	% COND	OB/XF MKT VALUE	NOTES
1	0855	CONC PAVER	1	0	0	0	1,771.00	SF	10.00	10.00	100	2025	2024		100	17,710	
2	0501	FP-AVERAGE	1	0	0	0	1.00	UT	5,000.00	5,000.00	100	2025	2024		100	5,000	
3	0855	CONC PAVER	2	0	0	0	2,457.00	SF	10.00	10.00	100	2025	2024		100	24,570	
4	0501	FP-AVERAGE	2	0	0	0	1.00	UT	5,000.00	5,000.00	100	2025	2024		100	5,000	

LAND DESCRIPTION

TOTAL OB/XF 52,280

LN	USE CODE	CLS	LAND USE DESCRIPTION	CAP	RD	LOC ZONE	FRONT	DEPTH	TOT LND UTS	UNIT TYPE	DT	DPTH FACT	% COND	TOT ADJ	UNIT PRICE	ADJ UNIT PRICE	LAND VALUE	OTHER ADJUSTMENTS AND NOTES	YEAR	DENSITY	DECL	FRZ	YR	CONSRV
1	000100	C	RES	0		RSF-2	0.00	0.00	0.94	AC		1.00	1.00	1.25	315,000.00	393,750.00	370,125							

REVIEW DATE 12/16/2024 BY HS Total Acres: 0.94 Total Land Value: 370,125 Market: 0 Agricultural: 0 Common: 370,125 PRINTED 07/30/2025 BY SYS

LOTS 11 & 13,
LOT 9 (EX PT IN OR 2753/154 & OR
HIGHWAY ESTATES PB 3/9

NEW ATLANTIC BUILDERS INC
5875 MINING TERRACE STE 206
JACKSONVILLE, FL 32257

2025

00-00-30-0290-0011-0000

NASSAU COUNTY PROPERTY

BUILDING CHARACTERISTICS

ELEMENT	CD	CONSTRUCTION
Exterior Wall	31	HARDIE BRD 100
Roof Structur	03	GABLE/HIP 100
Roof Cover	03	COMP SHNGL 100
Interior Wall	05	DRYWALL 100
Interior Floo	13	LVT/LAMNT 70
Interior Floo	14	CARPET 30
Air Condition	03	CENTRAL 100
Heating Type	04	AIR DUCTED 100
Bedrooms		4 100
Bathrooms		3.5 100
Frame	02	WOOD FRAME 100
Stories	2.	2. 100
Quality	05	Quality Level 05
DOR CODE	0100	SINGLE FAMILY
MAP NUM		MKT AREA 02
NEIGHBORHOOD/LOC	2021.00	

AREA TYPE	TOTAL GROSS AREA	PCT OF BASE	YEAR	TOT ADJ AREA	SUBAREA MARKET VALUE
BAS	1,658	100	2025	1,658	295,323
FGR	713	55	2025	392	69,823
FOP	190	30	2025	57	10,153
FOP	240	30	2025	72	12,825
FUS	1,048	100	2025	1,048	186,670
PTO	66	5	2025	3	534
STR	60	10	2025	6	1,069
TOTALS	3,975			3,236	576,396

MARKET ADJUSTMENTS

TYPE	MDL	EFF. AREA	TOT ADJ PTS	EFF. BASE RATE	REPL. COST NEW	AYB	EYB	ECON	FNCT		NORM	% COND
0500	01	3,236	112.7368	178.12	576,396	2024	2024	0	0	0	0.00	100.00

2 SFR CUST – 0% - 2025 Heated Area: 2706 HX Base Yr

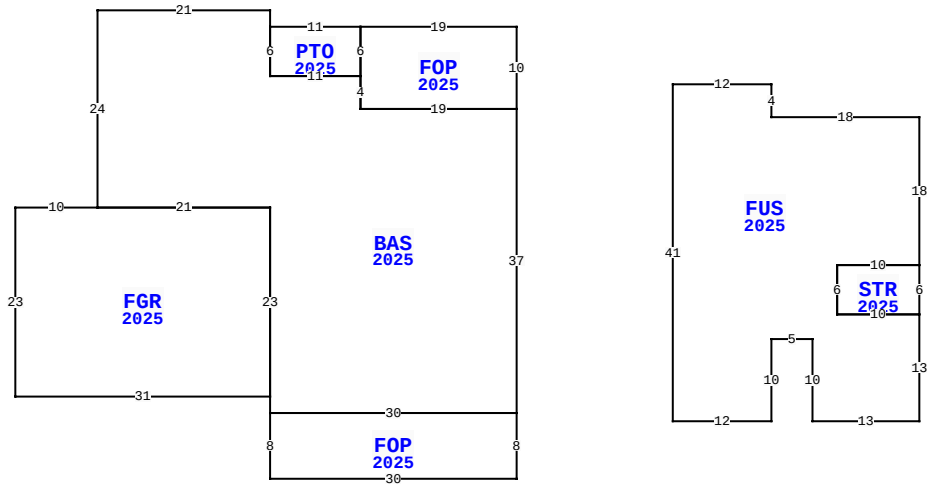

NASSAU COUNTY PROPERTY VALUATION SUMMARY

VALUATION BY	STANDARD
Tax Group: 8	Tax Dist:
BUILDING MARKET VALUE	1,092,226
TOTAL MARKET OB/XF VALUE	52,280
TOTAL LAND VALUE - MARKET	370,125
TOTAL MARKET VALUE	1,514,631
SOH/AGL Deduction	0
ASSESSED VALUE	1,514,631
TOTAL EXEMPTION VALUE	0
BASE TAXABLE VALUE	1,514,631
TOTAL JUST VALUE	1,514,631
NCON VALUE	1,144,506
INCOME VALUE	
PREVIOUS YEAR MKT VALUE	

PERMIT NUM	DESCRIPTION	AMT	ISSUED

SALES DATA

OFF RECORD Number	DATE	TYPE INST	Q / U	V / I	RSN CD	SALE PRICE
2612/1341	1/06/2023	WD	Q	V	05	1,140,000

GRANTOR: PATRIOT RIDGE LLP

GRANTEE: NEW ATLANTIC BUILDE

BLD DATE		LGL DATE	
XF DATE		LAND DATE	04/29/2025 MLU
INC DATE		AG DATE	

2646 BAILEY RD, FERNANDINA BEACH

EXTRA FEATURES

L N	OB/XF CODE	DESCRIPTION	BLD	CAP	L	W	UNITS	UT	Adj R	ADJ UNIT PRICE	ORIG COND	YEAR ON	YEAR ACTUAL	Q	% COND	OB/XF MKT VALUE	NOTES

BUILDING NOTES

BUILDING DIMENSIONS

BAS=[YR=2025;ORIG=40,10] S24 E21 S23 S2 E30 N37 W19 N4 W11 N6 N2 W21 $
FGR=[YR=2025;ORIG=61,34] W21 W10 S23 E31 N23 $
FOP=[YR=2025;ORIG=61,59] S8 E30 N8 W30 $
FOP=[YR=2025;ORIG=91,22] N10 W19 S6 S4 E19 $
PTO=[YR=2025;ORIG=61,12] E11 S6 W11 N6 $
FUS=[YR=2025;ORIG=110,60] N41 E12 S4 E18 S18 W10 S6 E10 S13 W13 N10 W5 S10 W12 $
STR=[YR=2025;ORIG=130,41] E10 S6 W10 N6 $
.

LAND DESCRIPTION

TOTAL OB/XF 0

L N	USE CODE	CLS	LAND USE DESCRIPTION	CAP	R D	LOC ZONE	FRONT	DEPTH	TOT LND UTS	UNIT TYPE	D T	DPTH FACT	% COND	TOT ADJ	UNIT PRICE	ADJ UNIT PRICE	LAND VALUE	OTHER ADJUSTMENTS AND NOTES	YEAR	DENSITY	DECL	FRZ	YR	CONSRV

REVIEW DATE 12/16/2024 BY HS Total Acres: 0.94 Total Land Value: 370,125 Market: 0 Agricultural: 0 Common: 370,125 PRINTED 07/30/2025 BY SYS