LOT 13
IN OR 2069/1666
FOREST OAKS PB 5/64

FELLOWS DANIEL S &/BRADDOCK LAUREN E
830 FOUNTAIN DR
FERNANDINA BEACH, FL 32034

2025

00-00-30-0252-0013-0000

NASSAU COUNTY PROPERTY

BUILDING CHARACTERISTICS

ELEMENT	CD	CONSTRUCTION
Exterior Wall	05	AVERAGE 100
Roof Structur	03	GABLE/HIP 100
Roof Cover	03	COMP SHNGL 100
Interior Wall	05	DRYWALL 100
Interior Floo	11	CLAY TILE 50
Interior Floo	12	HARDWOOD 50
Air Condition	03	CENTRAL 100
Heating Type	04	AIR DUCTED 100
Bedrooms		3 100
Bathrooms		2.5 100
Frame	02	WOOD FRAME 100
Stories	2.	2. 100
Units		0 100
BUD8 Adjustme	05	DIST 1A 100
Occupancy	00	NONE 100
Quality	03	Quality Level 03
DOR CODE	0100	SINGLE FAMILY
MAP NUM		MKT AREA 02
NEIGHBORHOOD/LOC	2028.00	

AREA TYPE	TOTAL GROSS AREA	PCT OF BASE	YEAR	TOT ADJ AREA	SUBAREA MARKET VALUE
BAS	1,082	100	1993	1,082	158,064
FGR	540	55	1993	297	43,388
FOP	144	30	1993	43	6,281
FOP	180	30	1993	54	7,888
FST	48	55	1993	26	3,798
FUS	1,012	100	1993	1,012	147,838
TOTALS	3,006			2,514	367,258

MARKET ADJUSTMENTS

TYPE	MDL	EFF. AREA	TOT ADJ PTS	EFF. BASE RATE	REPL. COST NEW	AYB	EYB	ECON	FNCT		NORM	% COND
0500	01	2,514	110.4000	174.43	438,517	1988	1988	0	0	0	16.25	83.75

1 SFR CUST – 100% - 2017 Heated Area: 2094 HX Base Yr 2017

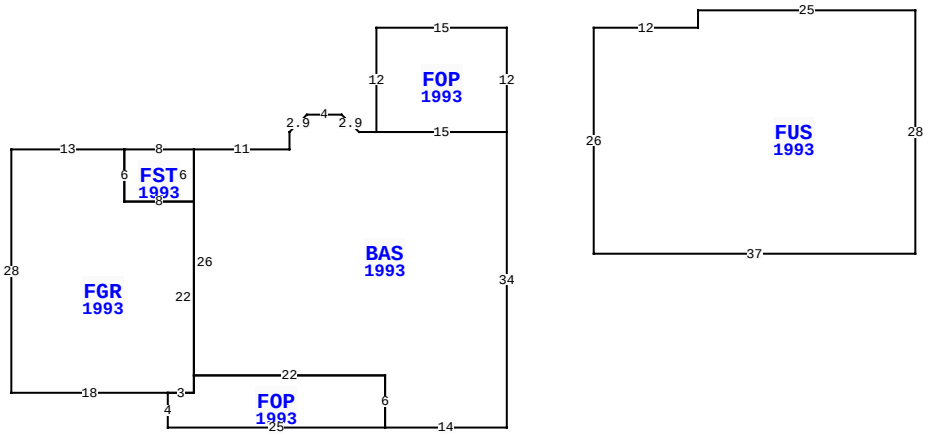

830 FOUNTAIN DR, FERNANDINA BEACH

BLD DATE		LGL DATE	
XF DATE		LAND DATE	04/29/2025 MLU
INC DATE		AG DATE	

VALUATION SUMMARY

VALUATION BY		STANDARD
Tax Group: 8	Tax Dist:	
BUILDING MARKET VALUE		367,258
TOTAL MARKET OB/XF VALUE		14,920
TOTAL LAND VALUE - MARKET		215,000
TOTAL MARKET VALUE		597,178
SOH/AGL Deduction		223,242
ASSESSED VALUE		373,936
TOTAL EXEMPTION VALUE	HX HB	50,722
BASE TAXABLE VALUE		323,214
TOTAL JUST VALUE		597,178
NCON VALUE		0
INCOME VALUE		
PREVIOUS YEAR MKT VALUE		502,361

PERMIT NUM	DESCRIPTION	AMT	ISSUED
5840	SWIM POOL	9,250	06/28/1989
4716	NEW CONSTR	68,345	03/08/1988

SALES DATA

OFF RECORD Number	DATE	TYPE INST	Q U	V I	RSN CD	SALE PRICE
2069/1666	8/31/2016	WD	Q	I	01	410,000
GRANTOR: CRAWFORD STEVEN M & M						
GRANTEE: FELLOWS DANIEL S &						
1290/0869	1/25/2005	WD	Q	I		390,000
GRANTOR: OLD REPUBLIC NATIONAL						
GRANTEE: CRAWFORD STEVEN M &						

BUILDING NOTES

BUILDING DIMENSIONS

FOP=[YR=1993] W15 S12 BAS=[YR=1993] W2 U2 L2 W4 L2 D2 S2 W11 FST=[YR=1993] W8 FGR=[YR=1993] W13 S28 E18 FOP=[YR=1993] S4 E25 N6 W22 S2 W3$ E3 N22 W8 N6$ S6 E8 N6$ S26 E22 S6 E14 N34 W15$ E15 N12$ PTR= E10 FUS=[YR=1993] E12 N2 E25 S28 W37 N26$ W10$.

EXTRA FEATURES

LN	OB/XF CODE	DESCRIPTION	BLD	CAP	L	W	UNITS	UT	Adj R	ADJ UNIT PRICE	ORIG COND	YEAR ON	YEAR ACTUAL	Q	% COND	OB/XF MKT VALUE	NOTES
1	0810	CONCRETE A	0	100	25	3	90.00	SF	6.50	6.50	100	1988	1988	3	52	304	
2	0812	CONCRETE C	0	100	73	16	1,111.00	SF	4.00	4.00	100	1988	1988	3	52	2,311	
3	0504	FP-ELECTRI	0	100	0	0	1.00	UT	2,000.00	2,000.00	100	1988	1988	3	62	1,240	
4	0861	POOL GUNIT	0	100	28	14	392.00	SF	85.00	85.00	100	1989	1989	3	20	6,664	
5	0845	KOOL DECK	0	100	0	0	318.00	SF	7.25	7.25	100	1989	1989	3	54.5	1,256	
6	0810	CONCRETE A	0	100	8	4	32.00	SF	6.50	6.50	100	1991	1991	3	59.5	124	
7	0810	CONCRETE A	0	100	10	4	40.00	SF	6.50	6.50	100	1988	1988	3	52	135	
8	0810	CONCRETE A	0	100	9	3	27.00	SF	6.50	6.50	100	1991	1991	3	59.5	104	
9	0940	SHEDS/PORT	0	100	28	13	364.00	SF	30.00	30.00	100	2000	2000	3	20	2,184	
10	0855	CONC PAVER	0	100	0	0	68.00	SF	10.00	10.00	100	2008	2008	3	88	598	

LAND DESCRIPTION

TOTAL OB/XF 14,920

LN	USE CODE	CLS	LAND USE DESCRIPTION	CAP	RD	LOC ZONE	FRONT	DEPTH	TOT LND UTS	UNIT TYPE	DT	DPTH FACT	% COND	TOT ADJ	UNIT PRICE	ADJ UNIT PRICE	LAND VALUE	OTHER ADJUSTMENTS AND NOTES	YEAR	DENSITY	DECL	FRZ	YR	CONSRV
1	000100	C	RES	100		RSF-2	0.00	0.00	1.00	LT		1.00	1.00	1.00	215,000.00	215,000.00	215,000							

REVIEW DATE 01/31/2024 BY KBA Total Acres: 0.00 Total Land Value: 215,000 Market: 0 Agricultural: 0 Common: 215,000 PRINTED 07/30/2025 BY SYS