LOT 54
FLORENCE POINT PB 4/109 & 110

WILLIAMS DANE L & KATHERINE G
5334 FLORENCE POINT DR
FERNANDINA BEACH, FL 32034

2025

00-00-30-0250-0054-0000

NASSAU COUNTY PROPERTY

BUILDING CHARACTERISTICS

ELEMENT	CD	CONSTRUCTION
Exterior Wall	12	CEDAR 100
Roof Structur	03	GABLE/HIP 100
Roof Cover	03	COMP SHNGL 100
Interior Wall	05	DRYWALL 100
Interior Floo	14	CARPET 80
Interior Floo	13	LVT/LAMNT 20
Air Condition	03	CENTRAL 100
Heating Type	04	AIR DUCTED 100
Bedrooms		2 100
Bathrooms		2 100
Frame	02	WOOD FRAME 100
Stories	1.	1. 100
Units		0 100
BUD8 Adjustme	05	DIST 1A 100
Occupancy	00	NONE 100
Quality	03	Quality Level 03
DOR CODE	0100	SINGLE FAMILY
MAP NUM		MKT AREA 03
NEIGHBORHOOD/LOC	3035.00	

AREA TYPE	TOTAL GROSS AREA	PCT OF BASE	YEAR	TOT ADJ AREA	SUBAREA MARKET VALUE
BAS	1,782	100	1993	1,782	162,046
BAS	288	100	1999	288	26,189
FGR	486	55	1993	267	24,279
FOP	18	30	1993	5	455
FOP	33	30	1993	10	909
FSP	480	40	2007	192	17,460
UDG	484	55	1993	266	24,188
TOTALS	3,571			2,810	255,527

MARKET ADJUSTMENTS

TYPE	MDL	EFF. AREA	TOT ADJ PTS	EFF. BASE RATE	REPL. COST NEW	AYB	EYB	ECON	FNCT	AP	NORM	% COND
0900	01	2,810	105.9840	139.90	393,119	1984	1984	0	0	15	20.00	65.00

1 SNGL FAM – 100% - 2025 Heated Area: 2070 HX Base Yr 2025

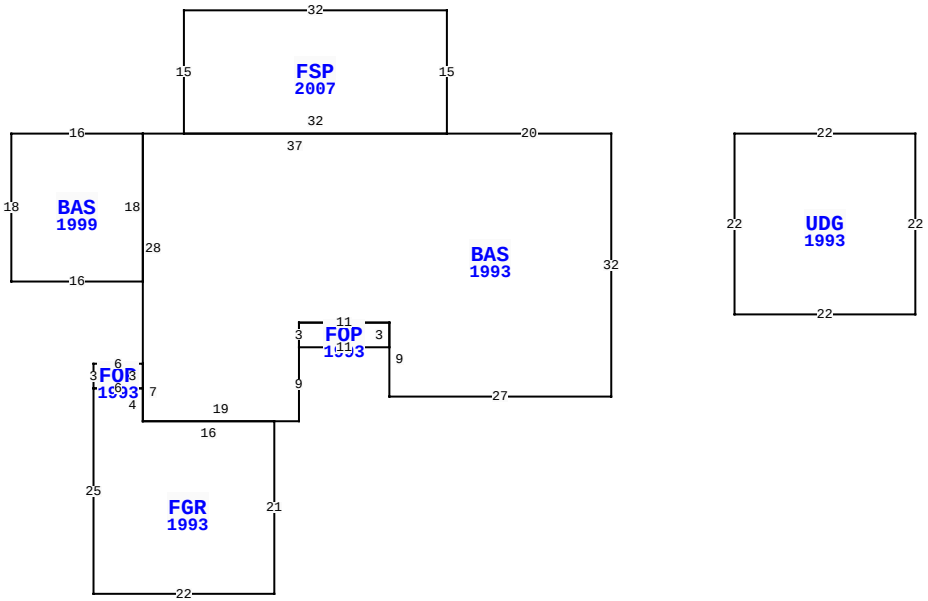

5334 FLORENCE POINT DR, FERNANDINA BEACH

BLD DATE		LGL DATE	
XF DATE		LAND DATE	06/18/2024 MLU
INC DATE		AG DATE	

VALUATION SUMMARY

VALUATION BY		STANDARD
Tax Group: 8	Tax Dist:	
BUILDING MARKET VALUE		255,527
TOTAL MARKET OB/XF VALUE		18,476
TOTAL LAND VALUE - MARKET		350,000
TOTAL MARKET VALUE		624,003
SOH/AGL Deduction		139,441
ASSESSED VALUE		484,562
TOTAL EXEMPTION VALUE	HX HB	50,722
BASE TAXABLE VALUE		433,840
TOTAL JUST VALUE		624,003
NCON VALUE		0
INCOME VALUE		
PREVIOUS YEAR MKT VALUE		679,902

PERMIT NUM	DESCRIPTION	AMT	ISSUED
B18713	REMODEL	4,010	10/31/2006
B9805217	ADDITION	15,000	07/01/1998

SALES DATA

OFF RECORD Number	DATE	TYPE INST	Q U	V I	RSN CD	SALE PRICE
2720/258	6/20/2024	WD	Q	I	01	650,000
GRANTOR: LANGER JAMES A & REBE						
GRANTEE: WILLIAMS DANE L & K						
1846/0808	3/20/2013	WD	Q	I	02	230,000
GRANTOR: FILMER MICHAEL A & BE						
GRANTEE: LANGER JAMES A & RE						

BUILDING NOTES

BUILDING DIMENSIONS

BAS=[YR=1993] W20 FSP=[YR=2007] N15 W32 S15 E32 $ W37
BAS=[YR=1999] W16 S18 E16 N18 $ S28 FOP=[YR=1993] W6 S3
FGR=[YR=1993] S25 E22 N21 W16 N4 W6 $ E6 N3 $ S7 E19 N9
FOP=[YR=1993] E11 N3 W11 S3 $ N3 E11 S9 E27 N32 $ PTR= E15
UDG=[YR=1993] E22 S22 W22 N22 $ W15 $.

EXTRA FEATURES

LN	OB/XF CODE	DESCRIPTION	BLD	CAP	L	W	UNITS	UT	Adj R	ADJ UNIT PRICE	ORIG COND	YEAR ON	YEAR ACTUAL	Q	% COND	OB/XF MKT VALUE	NOTES
1	0861	POOL GUNIT	0	100	0	0	255.00	SF	85.00	85.00	100	1984	1984	3	20	4,335	
2	0812	CONCRETE C	0	100	0	0	2,587.00	SF	4.00	4.00	100	1984	1984	3	41	4,243	
3	0500	FP-PRE FAB	0	100	0	0	1.00	UT	3,500.00	3,500.00	100	1984	1984	3	54	1,890	
4	0858	SCULP CONC	0	100	0	0	144.00	SF	13.00	13.00	100	1984	1984	3	79	1,479	
5	0810	CONCRETE A	0	100	8	10	80.00	SF	6.50	6.50	100	1984	1984	3	41	213	
6	0845	KOOL DECK	0	100	0	0	688.00	SF	7.25	7.25	100	1984	1984	3	41	2,045	
7	0910	SCRN RM L	0	100	32	30	960.00	SF	15.00	15.00	100	1984	1984	3	20	2,880	
8	0810	CONCRETE A	0	100	0	0	246.00	SF	6.50	6.50	100	2007	2007	3	87	1,391	

LAND DESCRIPTION

TOTAL OB/XF 18,476

LN	USE CODE	CLS	LAND USE DESCRIPTION	CAP	RD	LOC ZONE	FRONT	DEPTH	TOT LND UTS	UNIT TYPE	DT	DPTH FACT	% COND	TOT ADJ	UNIT PRICE	ADJ UNIT PRICE	LAND VALUE	OTHER ADJUSTMENTS AND NOTES	YEAR	DENSITY	DECL	FRZ	YR	CONSRV
1	000100	C	RES	100		RSF-1	0.00	0.00	1.00	LT		1.00	1.00	1.00	350,000.00	350,000.00	350,000							

REVIEW DATE 01/31/2024 BY KBA Total Acres: 0.00 Total Land Value: 350,000 Market: 0 Agricultural: 0 Common: 350,000 PRINTED 07/30/2025 BY SYS