LOT 13
FLORENCE POINT PB 4/109 & 110

HYRNE CHRISTOPHER M & KATHY LYNN JACOBSEN REVOCABL
5391 FLORENCE POINT DR
FERNANDINA BEACH, FL 32034

2025

00-00-30-0250-0013-0000

BUILDING CHARACTERISTICS

ELEMENT	CD	CONSTRUCTION
Exterior Wall	12	CEDAR 100
Roof Structur	08	IRREGULAR 100
Roof Cover	03	COMP SHNGL 100
Interior Wall	05	DRYWALL 90
Interior Wall	08	DECORATIVE 10
Interior Floo	11	CLAY TILE 60
Interior Floo	14	CARPET 40
Air Condition	03	CENTRAL 100
Heating Type	04	AIR DUCTED 100
Bedrooms		3 100
Bathrooms		3.5 100
Frame	02	WOOD FRAME 100
Stories	2.	2. 100
Units		0 100
BUD8 Adjustme	05	DIST 1A 100
Quality	03	Quality Level 03
DOR CODE	0100	SINGLE FAMILY
MAP NUM		MKT AREA 03
NEIGHBORHOOD/LOC	3035.00	

AREA TYPE	TOTAL GROSS AREA	PCT OF BASE	YEAR	TOT ADJ AREA	SUBAREA MARKET VALUE
BAS	1,369	100	1993	1,369	278,893
BAS	60	100	2017	60	12,223
BAS	208	100	2017	208	42,374
DCK	200	10	2017	20	4,074
FGR	570	55	1993	314	63,968
FOP	20	30	1993	6	1,223
FST	36	55	2017	20	4,074
FST	36	55	2017	20	4,074
FST	96	55	2017	53	10,797
FUS	1,121	100	1993	1,121	228,370
TOTALS	3,906			3,229	657,812

MARKET ADJUSTMENTS

TYPE	MDL	EFF. AREA	TOT ADJ PTS	EFF. BASE RATE	REPL. COST NEW	AYB	EYB	ECON	FNCT		NORM	% COND
0500	11	3,229	144.0637	227.62	734,985	1986	2003	0	0	0	10.50	89.50

1 SFR CUST – 0% - 2024 Heated Area: 2758 HX Base Yr

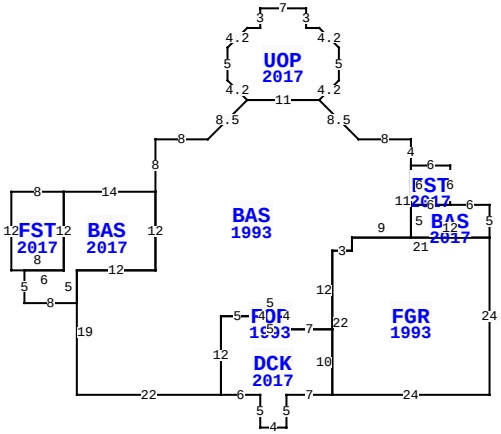

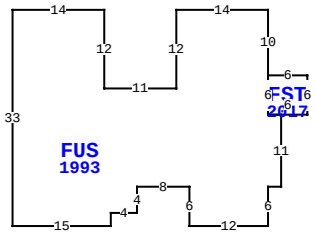

** This building has 11 Sub-Areas

5391 FLORENCE POINT DR, FERNANDINA BEACH

BLD DATE	08/03/2017 DJ	LGL DATE	
XF DATE		LAND DATE	
INC DATE		AG DATE	

EXTRA FEATURES

LN	OB/XF CODE	DESCRIPTION	BLD	CAP	L	W	UNITS	UT	Adj R	ADJ UNIT PRICE	ORIG COND	YEAR ON	YEAR ACTUAL	Q	% COND	OB/XF MKT VALUE	NOTES
1	0504	FP-ELECTRI	0	0	0	0	1.00	UT	2,000.00	2,000.00	100	1986	1986	3	58	1,160	
2	0812	CONCRETE C	0	0	0	0	2,537.00	SF	4.00	4.00	100	1986	1986	3	47	4,770	
3	0850	PEBBLE WLK	0	0	0	0	240.00	SF	3.50	3.50	100	1986	1986	3	47	395	
4	0858	SCULP CONC	0	0	0	0	409.00	SF	13.00	13.00	100	1986	1986	3	81	4,307	
5	0410	ELEVATOR	0	0	0	0	1.00	UT	10,000.00	10,000.00	100	2017	2017	3	100	10,000	
6	0810	CONCRETE A	0	0	0	0	222.00	SF	6.50	6.50	100	2017	2017	3	96	1,385	

NASSAU COUNTY PROPERTY

PAGE 1 of 1 8

VALUATION SUMMARY

VALUATION BY	STANDARD
Tax Group: 8	Tax Dist:
BUILDING MARKET VALUE	657,812
TOTAL MARKET OB/XF VALUE	22,017
TOTAL LAND VALUE - MARKET	526,500
TOTAL MARKET VALUE	1,206,329
SOH/AGL Deduction	0
ASSESSED VALUE	1,206,329
TOTAL EXEMPTION VALUE	0
BASE TAXABLE VALUE	1,206,329
TOTAL JUST VALUE	1,206,329
NCON VALUE	0
INCOME VALUE	
PREVIOUS YEAR MKT VALUE	1,176,907

PERMIT NUM	DESCRIPTION	AMT	ISSUED
B240014034	REMODEL	850,000	12/19/2024
B1632828	ADDITION	0	08/11/2016
1820	N/A	7,000	06/19/1986

SALES DATA

OFF RECORD Number	DATE	TYPE INST	Q / U	V / I	RSN CD	SALE PRICE
2640/855	5/17/2023	WD	Q	I	02	1,503,500
GRANTOR: POND DANIEL J						
GRANTEE: HYNE CHRISTOPHER M						
2000/0233	8/28/2015	WD	Q	I	01	562,500
GRANTOR: ST GEORGE FAMILY TRUS						
GRANTEE: POND DANIEL J & LIN						

BUILDING NOTES

BUILDING DIMENSIONS

BAS=[YR=2017] W6 FST=[YR=2017] N6 W6 BAS=[YR=1993] N4 W8 U6 L6 UOP=[YR=2017] U3 R3 N5 U3 L3 W2 N3 W7 S3 W2 D3 L3 S5 D3 R3 E11$ W11 D6 L6 W8 S8 BAS=[YR=2017] W14 FST=[YR=2017] W8 S12 E8 N12$ S12 W6 S5 E8 N5 E12 N12$ S12 W12 S19 E22 DCK=[YR=2017] E6 S5 E4 N5 E7 FGR=[YR=1993] E24 N24 W21 S2 W3 S22$ N10 W7 FOP=[YR=1993] N4 W5 S4 E5$ W5 N2 W5 S12$ N12 E5 N2 E5 S4 E7 N12 E3 N2 E9 N11$ S6 E6 $ W6 S5 E12 N5$ PTR= E20 FUS=[YR=1993] E14 S12 E11 N12 E14 S10 FST=[YR=2017] E6 S6 W6 N6$ S6 E2 S11 W2 S6 W12 N6 W8 S4 W4 S2 W15 N33$ W20$.

LAND DESCRIPTION

TOTAL OB/XF 22,017

LN	USE CODE	CLS	LAND USE DESCRIPTION	CAP	RD	LOC ZONE	FRONT	DEPTH	TOT LND UTS	UNIT TYPE	DT	DPTH FACT	% COND	TOT ADJ	UNIT PRICE	ADJ UNIT PRICE	LAND VALUE	OTHER ADJUSTMENTS AND NOTES	YEAR	DENSITY	DECL	FRZ	YR	CONSRV
1	000116	C	RES MARSH	0		RSF-	1117.00	145.00	117.00	FF		1.00	1.00	1.00	4,500.00	4,500.00	526,500							

REVIEW DATE 01/31/2024 BY KBA Total Acres: 0.00 Total Land Value: 526,500 Market: 0 Agricultural: 0 Common: 526,500 PRINTED 07/30/2025 BY SYS