LOT 10
IN OR 1865/1820
FLORENCE POINT PB 4/109 & 110

VEITCH PAMELA J REVOC LVG TRUST/VEITCH PAMELA J TR
5375 FLORENCE POINT DR
FERNANDINA BEACH, FL 32034

2025

00-00-30-0250-0010-0000

NASSAU COUNTY PROPERTY

BUILDING CHARACTERISTICS

ELEMENT	CD	CONSTRUCTION
Exterior Wall	12	CEDAR 100
Roof Structur	03	GABLE/HIP 100
Roof Cover	03	COMP SHNGL 100
Interior Wall	05	DRYWALL 100
Interior Floo	11	CLAY TILE 50
Interior Floo	14	CARPET 50
Air Condition	03	CENTRAL 100
Heating Type	04	AIR DUCTED 100
Bedrooms		3 100
Bathrooms		3 100
Frame	02	WOOD FRAME 100
Stories	1.	1. 100
Units		0 100
BUD8 Adjustme	05	DIST 1A 100
Occupancy	00	NONE 100
Quality	03	Quality Level 03
DOR CODE	0100	SINGLE FAMILY
MAP NUM		MKT AREA 03
NEIGHBORHOOD/LOC	3035.00	

AREA TYPE	TOTAL GROSS AREA	PCT OF BASE	YEAR	TOT ADJ AREA	SUBAREA MARKET VALUE
BAS	2,025	100	1993	2,025	233,134
BAS	612	100	1998	612	70,458
FGR	462	55	1993	254	29,242
FOP	28	30	1993	8	921
UOP	616	20	1993	123	14,161
UOP	118	20	1998	24	2,763
TOTALS	3,861			3,046	350,680

MARKET ADJUSTMENTS

TYPE	MDL	EFF. AREA	TOT ADJ PTS	EFF. BASE RATE	REPL. COST NEW	AYB	EYB	ECON	FNCT		NORM	% COND
0900	01	3,046	109.0200	143.91	438,350	1984	1984	0	0	0	20.00	80.00

1 SNGL FAM – 100% - 2014 Heated Area: 2637 HX Base Yr 2014

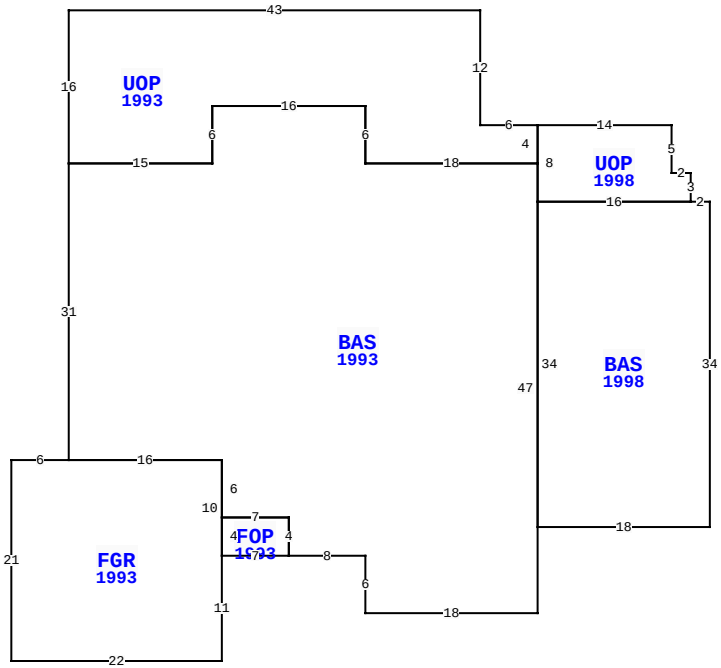

5375 FLORENCE POINT DR, FERNANDINA BEACH

BLD DATE		LGL DATE	
XF DATE		LAND DATE	
INC DATE		AG DATE	

NASSAU COUNTY PROPERTY — VALUATION SUMMARY

VALUATION BY		STANDARD
Tax Group: 8	Tax Dist:	
BUILDING MARKET VALUE		350,680
TOTAL MARKET OB/XF VALUE		32,092
TOTAL LAND VALUE - MARKET		450,000
TOTAL MARKET VALUE		832,772
SOH/AGL Deduction		347,446
ASSESSED VALUE		485,326
TOTAL EXEMPTION VALUE	HX HB WX	55,722
BASE TAXABLE VALUE		429,604
TOTAL JUST VALUE		832,772
NCON VALUE		0
INCOME VALUE		
PREVIOUS YEAR MKT VALUE		817,305

PERMIT NUM	DESCRIPTION	AMT	ISSUED
B1327589	ADDITION	6,905	08/01/2013
B1327153	GARDOOR	1,250	05/01/2013
B1327226	SWIM POOL	23,500	05/01/2013
E1326476	ELE/POOL	0	04/01/2013
R1213231	REPAIR/RRF	2,860	11/01/2012
B9805083	ADDITION	37,341	06/01/1998

SALES DATA

OFF RECORD Number	DATE	TYPE INST	Q / U	V / I	RSN CD	SALE PRICE
1865/1820	6/27/2013	WD	U	I	30	100
GRANTOR: VEITCH PAMELA J TRUST						
GRANTEE: VEITCH PAMELA J TRU						
1843/1904	2/28/2013	PR	Q	I	02	432,500
GRANTOR: BLIDE CHRYSTAL C P/R						
GRANTEE: VEITCH PAMELA J TRU						

BUILDING NOTES

BUILDING DIMENSIONS

BAS=[YR=1998] W2 UOP=[YR=1998] N3 W2 N5 W14 UOP=[YR=1993] W6 N12 W43 S16 BAS=[YR=1993] S31FGR=[YR=1993] W6 S21 E22 N11 FOP=[YR=1993] E7 N4 W7 S4$ N10 W16 $ E16 S6 E7 S4 E8 S6 E18 N47 W18 N6 W16 S6 W15$ E15 N6 E16 S6 E18 N4$ S8 E16 $ W16 S34 E18 N34 $.

EXTRA FEATURES

LN	OB/XF CODE	DESCRIPTION	BLD	CAP	L	W	UNITS	UT	Adj R	ADJ UNIT PRICE	ORIG COND	YEAR ON	YEAR ACTUAL	Q	% COND	OB/XF MKT VALUE	NOTES
1	0500	FP-PRE FAB	0	100	0	0	1.00	UT	3,500.00	3,500.00	100	1984	1984	3	54	1,890	
2	0855	CONC PAVER	0	100	0	0	2,025.00	SF	7.00	7.00	100	2013	2013	3	93	13,183	
3	0855	CONC PAVER	0	100	0	0	198.00	SF	7.00	7.00	100	2013	2013	3	93	1,289	
4	0911	SCRN RM A	0	100	30	13	390.00	SF	17.50	17.50	100	2013	2013	3	55	3,754	
5	0861	POOL GUNIT	0	100	0	0	184.00	SF	85.00	85.00	100	2013	2013	3	68	10,635	
6	0855	CONC PAVER	0	100	0	0	206.00	SF	7.00	7.00	100	2013	2013	3	93	1,341	

LAND DESCRIPTION

TOTAL OB/XF 32,092

LN	USE CODE	CLS	LAND USE DESCRIPTION	CAP	RD	LOC ZONE	FRONT	DEPTH	TOT LND UTS	UNIT TYPE	DT	DPTH FACT	% COND	TOT ADJ	UNIT PRICE	ADJ UNIT PRICE	LAND VALUE	OTHER ADJUSTMENTS AND NOTES	YEAR	DENSITY	DECL	FRZ	YR	CONSRV
1	000116	C	RES MARSH	100		RSF-	1100.00	110.00	100.00	FF		1.00	1.00	1.00	4,500.00	4,500.00	450,000							

REVIEW DATE 01/31/2024 BY KBA Total Acres: 0.00 Total Land Value: 450,000 Market: 0 Agricultural: 0 Common: 450,000 PRINTED 07/30/2025 BY SYS