LOT 6
FLORENCE POINT PB 4/109 & 110

JAQUITH KENNETH D & KRISTINE M
5343 FLORENCE POINT DR
FERNANDINA BEACH, FL 32034

2025

00-00-30-0250-0006-0000

BUILDING CHARACTERISTICS

ELEMENT	CD	CONSTRUCTION
Exterior Wall	12	CEDAR 100
Roof Structur	03	GABLE/HIP 100
Roof Cover	03	COMP SHNGL 100
Interior Wall	05	DRYWALL 100
Interior Floo	12	HARDWOOD 100
Air Condition	03	CENTRAL 100
Heating Type	04	AIR DUCTED 100
Bedrooms		3 100
Bathrooms		2 100
Frame	02	WOOD FRAME 100
Stories	1.5	1.5 100
Units		0 100
BUD8 Adjustme	06	DIST 1D 100
Occupancy	00	NONE 100
Quality	04	Quality Level 04

DOR CODE	0100	SINGLE FAMILY	
MAP NUM		MKT AREA	03
NEIGHBORHOOD/LOC	3035.00		

AREA TYPE	TOTAL GROSS AREA	PCT OF BASE	YEAR	TOT ADJ AREA	SUBAREA MARKET VALUE
BAS	1,536	100	1993	1,536	218,456
BAS	430	100	2008	430	61,156
DCK	662	10	1993	66	9,386
FGR	576	55	1993	317	45,085
FOP	64	30	1993	19	2,702
FSP	426	40	2008	170	24,178
FUS	392	100	1993	392	55,752
STP	90	10	1993	9	1,280
STP	44	10	2008	4	569
TOTALS	4,220			2,943	418,566

MARKET ADJUSTMENTS

TYPE	MDL	EFF. AREA	TOT ADJ PTS	EFF. BASE RATE	REPL. COST NEW	AYB	EYB	ECON	FNCT		NORM	% COND
0500	01	2,943	112.5180	177.78	523,207	1984	1984	0	0	0	20.00	80.00

1 SFR CUST – 100% - 2022 Heated Area: 2358 HX Base Yr 2022

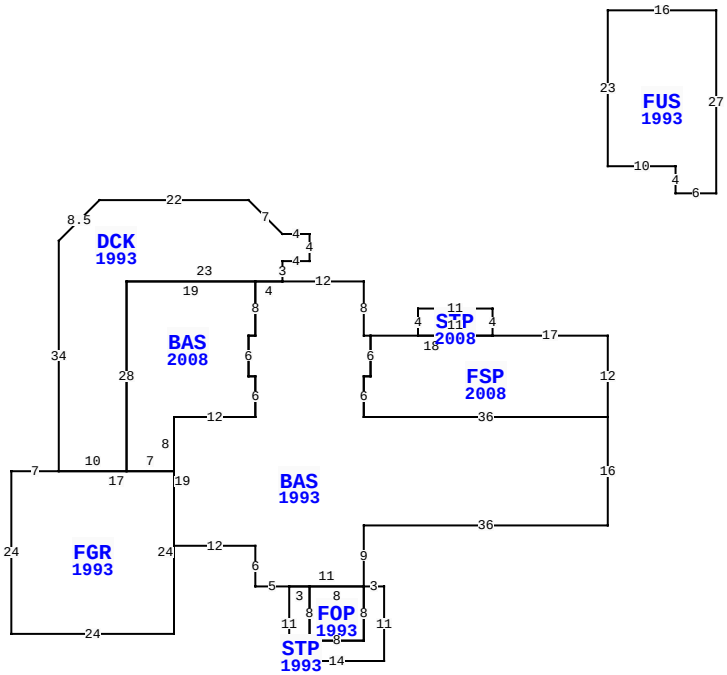

5343 FLORENCE POINT DR, FERNANDINA BEACH

BLD DATE		LGL DATE	
XF DATE		LAND DATE	
INC DATE		AG DATE	

NASSAU COUNTY PROPERTY

PAGE 1 of 1 8

VALUATION SUMMARY

VALUATION BY		STANDARD
Tax Group: 8	Tax Dist:	
BUILDING MARKET VALUE		418,566
TOTAL MARKET OB/XF VALUE		37,411
TOTAL LAND VALUE - MARKET		504,000
TOTAL MARKET VALUE		959,977
SOH/AGL Deduction		146,235
ASSESSED VALUE		813,742
TOTAL EXEMPTION VALUE	HX HB	50,722
BASE TAXABLE VALUE		763,020
TOTAL JUST VALUE		959,977
NCON VALUE		0
INCOME VALUE		
PREVIOUS YEAR MKT VALUE		977,016

PERMIT NUM	DESCRIPTION	AMT	ISSUED
230001792	861=250 1243=694	95,000	02/09/2023

SALES DATA

OFF RECORD Number	DATE	TYPE INST	Q / U	V / I	RSN CD	SALE PRICE
2364/0043	5/27/2020	WD	Q	I	01	775,000
GRANTOR: WOOLSEY CHRISTOPHER &						
GRANTEE: JAQUITH KENNETH D &						
2085/0013	11/17/2016	SW	U	I	12	390,000
GRANTOR: COMPASS BANK						
GRANTEE: WOOLSEY CHRISTOPHER						

BUILDING NOTES

BUILDING DIMENSIONS

FSP=[YR=2008] W17 STP=[YR=2008] N4 W11 S4 E11$ W18
BAS=[YR=1993] W1 N8 W12 DCK=[YR=1993] N3 E4 N4 W4 U5 L5 W22
L6 D6 S34 FGR=[YR=1993] W7 S24 E24 N24 BAS=[YR=2008] N8 E12
N6 W1 N6 E1 N8 W19 S28 E7$ W17$ E10 N28 E23$ W4 S8 W1 S6 E1
S6 W12 S19 E12 S6 E5 STP=[YR=1993] S11 E14 N11 W3
FOP=[YR=1993] W8 S8 E8 N8$ S8 W8 N8 W3$ E11 N9 E36 N16 W36 N6
E1 N6$ S6 W1 S6 E36 N12$ PTR=N25 FUS=[YR=1993] N23 E16 S27 W6
N4 W10$ S25$.

EXTRA FEATURES

L N	OB/XF CODE	DESCRIPTION	BLD	CAP	L	W	UNITS	UT	Adj R	ADJ UNIT PRICE	ORIG COND	YEAR ON	YEAR ACTUAL	Q	% COND	OB/XF MKT VALUE	NOTES
1	0504	FP-ELECTRI	0	100	0	0	1.00	UT	2,000.00	2,000.00	100	1984	1984	3	54	1,080	
2	0811	CONCRETE B	0	100	0	0	571.00	SF	5.20	5.20	100	1984	1984	3	41	1,217	
3	0812	CONCRETE C	0	100	0	0	3,180.00	SF	4.00	4.00	100	1996	1996	3	70	8,904	
4	0861	POOL GUNIT	0	100	25	10	250.00	SF	85.00	85.00	100	2024	2023		98	20,825	
5	1243	WD DECK F	0	100	0	0	694.00	SF	8.00	8.00	100	2024	2023		97	5,385	

LAND DESCRIPTION

TOTAL OB/XF 37,411

L N	USE CODE	CLS	LAND USE DESCRIPTION	CAP	R D	LOC ZONE	FRONT	DEPTH	TOT LND UTS	UNIT TYPE	D T	DPTH FACT	% COND	TOT ADJ	UNIT PRICE	ADJ UNIT PRICE	LAND VALUE	OTHER ADJUSTMENTS AND NOTES	YEAR	DENSITY	DECL	FRZ	YR	CONSRV
1	000116	C	RES MARSH	100		RSF-	1112.00	214.00	112.00	FF		1.00	1.00	1.00	4,500.00	4,500.00	504,000							

REVIEW DATE 02/14/2024 BY HS Total Acres: 0.00 Total Land Value: 504,000 Market: 0 Agricultural: 0 Common: 504,000 PRINTED 07/30/2025 BY SYS