LOT 1
CASTRO COURT PBK 6/285

KOONTZ BARBARA P & CLYDE RUSH JOINT REV TRUST
1348 MANUCY RD
FERNANDINA BEACH, FL 32034

2025

00-00-30-0225-0001-0000

BUILDING CHARACTERISTICS

ELEMENT	CD	CONSTRUCTION
Exterior Wall	10	ABOVE AVG 100
Roof Structur	08	IRREGULAR 100
Roof Cover	03	COMP SHNGL 100
Interior Wall	05	DRYWALL 100
Interior Floo	12	HARDWOOD 50
Interior Floo	14	CARPET 50
Air Condition	03	CENTRAL 100
Heating Type	04	AIR DUCTED 100
Bedrooms		3 100
Bathrooms		3 100
Frame	02	WOOD FRAME 100
Stories	2.	2. 100
Units		0 100
Occupancy	00	NONE 100
Quality	05	Quality Level 05
DOR CODE	0100	SINGLE FAMILY
MAP NUM		MKT AREA 03
NEIGHBORHOOD/LOC	3027.00	

AREA TYPE	TOTAL GROSS AREA	PCT OF BASE	YEAR	TOT ADJ AREA	SUBAREA MARKET VALUE
BAS	1,969	100	2015	1,969	284,065
FGR	744	55	2015	409	59,006
FOP	210	30	2015	63	9,089
FOP	372	30	2015	112	16,158
FUS	859	100	2015	859	123,927
STR	77	10	2015	8	1,154
TOTALS	4,231			3,420	493,400

MARKET ADJUSTMENTS

TYPE	MDL	EFF. AREA	TOT ADJ PTS	EFF. BASE RATE	REPL. COST NEW	AYB	EYB	ECON	FNCT		NORM	% COND
0900	01	3,420	113.8500	150.28	513,958	2015	2015	0	0	0	4.00	96.00

1 SNGL FAM – 100% - 2017 Heated Area: 2828 HX Base Yr 2017

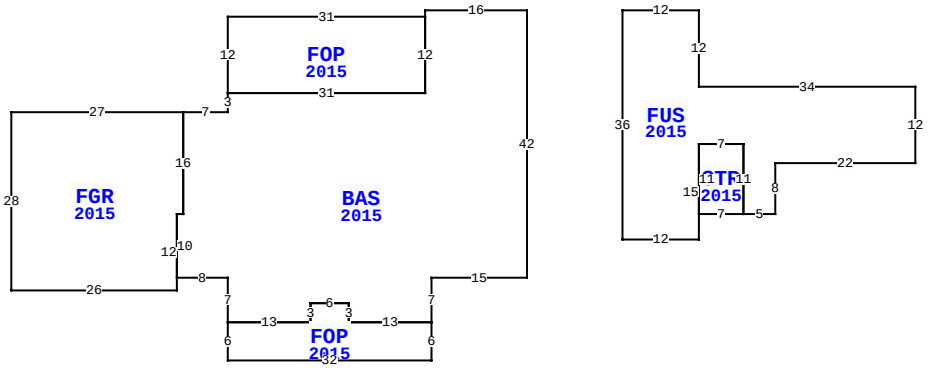

1348 MANUCY RD, FERNANDINA BEACH

BLD DATE		LGL DATE	
XF DATE		LAND DATE	03/26/2024 MLU
INC DATE		AG DATE	

NASSAU COUNTY PROPERTY

PAGE 1 of 1 8

VALUATION SUMMARY

VALUATION BY		STANDARD
Tax Group: 8	Tax Dist:	
BUILDING MARKET VALUE		493,400
TOTAL MARKET OB/XF VALUE		19,683
TOTAL LAND VALUE - MARKET		300,000
TOTAL MARKET VALUE		813,083
SOH/AGL Deduction		371,565
ASSESSED VALUE		441,518
TOTAL EXEMPTION VALUE	HX HB	50,722
BASE TAXABLE VALUE		390,796
TOTAL JUST VALUE		813,083
NCON VALUE		0
INCOME VALUE		
PREVIOUS YEAR MKT VALUE		789,597

PERMIT NUM	DESCRIPTION	AMT	ISSUED
B221183	ADDITION	0	03/01/2022
B1530599	CO ISSUED	0	01/07/2016
B1530599	NEW CONSTR	373,528	06/01/2015

SALES DATA

OFF RECORD Number	DATE	TYPE INST	Q / U	V / I	RSN CD	SALE PRICE
2709/804	5/01/2024	WD	U	I	11	100
GRANTOR: KOONTZ CLYDE R & BARB						
GRANTEE: KOONTZ BARBARA P &						
1917/0739	5/12/2014	WD	Q	V	02	125,500
GRANTOR: GIBBS STEPHEN W & JAN						
GRANTEE: KOONTZ CLYDE R & BA						

BUILDING NOTES

BUILDING DIMENSIONS

BAS=[YR=2015] W16 S1 FOP=[YR=2015] W31 S12 E31 N12$ S12 W31 S3 W7 FGR=[YR=2015] W27 S28 E26 N12 E1 N16 $ S16 W1 S10 E8 S7 FOP=[YR=2015] S6 E32 N6 W13 N3 W6 S3 W13$ E13 N3 E6 S3 E13 N7 E15 N42$ PTR= E15 FUS=[YR=2015] E12 S12 E34 S12 W22 S8 W5 STR=[YR=2015] W7 N11 E7 S11$ N11 W7 S15 W12 N36$ W15$.

EXTRA FEATURES

LN	OB/XF CODE	DESCRIPTION	BLD	CAP	L	W	UNITS	UT	Adj R	ADJ UNIT PRICE	ORIG COND	YEAR ON	YEAR ACTUAL	Q	% COND	OB/XF MKT VALUE	NOTES
1	0855	CONC PAVER	0	100	0	0	1,392.00	SF	7.00	7.00	100	2015	2015	3	95	9,257	
2	0855	CONC PAVER	0	100	0	0	264.00	SF	7.00	7.00	100	2015	2015	3	95	1,756	
3	0810	CONCRETE A	0	100	0	0	90.00	SF	6.50	6.50	100	2015	2015	3	95	556	
4	0855	CONC PAVER	0	100	0	0	310.00	SF	10.00	10.00	100	2022	2022	3	99	3,069	
5	0911	SCRN RM A	0	100	0	0	310.00	SF	17.50	17.50	100	2022	2022	3	93	5,045	

LAND DESCRIPTION

TOTAL OB/XF 19,683

LN	USE CODE	CLS	LAND USE DESCRIPTION	CAP	RD	LOC ZONE	FRONT	DEPTH	TOT LND UTS	UNIT TYPE	DT	DPTH FACT	% COND	TOT ADJ	UNIT PRICE	ADJ UNIT PRICE	LAND VALUE	OTHER ADJUSTMENTS AND NOTES	YEAR	DENSITY	DECL	FRZ	YR	CONSRV
1	000100	C	RES	100		RSF-1	0.00	0.00	1.00	LT		1.00	1.00	1.00	300,000.00	300,000.00	300,000							

REVIEW DATE 01/31/2024 BY KBA Total Acres: 0.00 Total Land Value: 300,000 Market: 0 Agricultural: 0 Common: 300,000 PRINTED 07/30/2025 BY SYS