LOT 16
IN OR 1986/1113
EGANS BLUFF NORTH PB 5/272

MCKEE LORI A & TIMOTHY
PO BOX 454
MACINTOSH, FL 32664

2025

00-00-30-021N-0016-0000

NASSAU COUNTY PROPERTY

BUILDING CHARACTERISTICS

ELEMENT	CD	CONSTRUCTION
Exterior Wall	16	WD FR STUC 100
Roof Structur	03	GABLE/HIP 100
Roof Cover	12	MODULAR MT 100
Interior Wall	05	DRYWALL 100
Interior Floo	14	CARPET 80
Interior Floo	08	SHT VINYL 20
Air Condition	03	CENTRAL 100
Heating Type	04	AIR DUCTED 100
Bedrooms		3 100
Bathrooms		2 100
Frame	02	WOOD FRAME 100
Stories	1.	1. 100
Units		0 100
Occupancy	00	NONE 100
Quality	06	Quality Level 06
DOR CODE	0100	SINGLE FAMILY
MAP NUM		MKT AREA 02
NEIGHBORHOOD/LOC	2025.00	

AREA TYPE	TOTAL GROSS AREA	PCT OF BASE	YEAR	TOT ADJ AREA	SUBAREA MARKET VALUE
BAS	1,457	100	1993	1,457	205,607
FGR	436	55	1993	240	33,868
FOP	18	30	1993	5	706
FOP	36	30	1993	11	1,552
UOP	18	20	1993	4	564
TOTALS	1,965			1,717	242,297

MARKET ADJUSTMENTS

TYPE	MDL	EFF. AREA	TOT ADJ PTS	EFF. BASE RATE	REPL. COST NEW	AYB	EYB	ECON	FNCT		NORM	% COND
0900	01	1,717	128.8000	170.02	291,924	1990	1990	0	0	0	17.00	83.00

1 SNGL FAM – 0% - 0 Heated Area: 1457 HX Base Yr

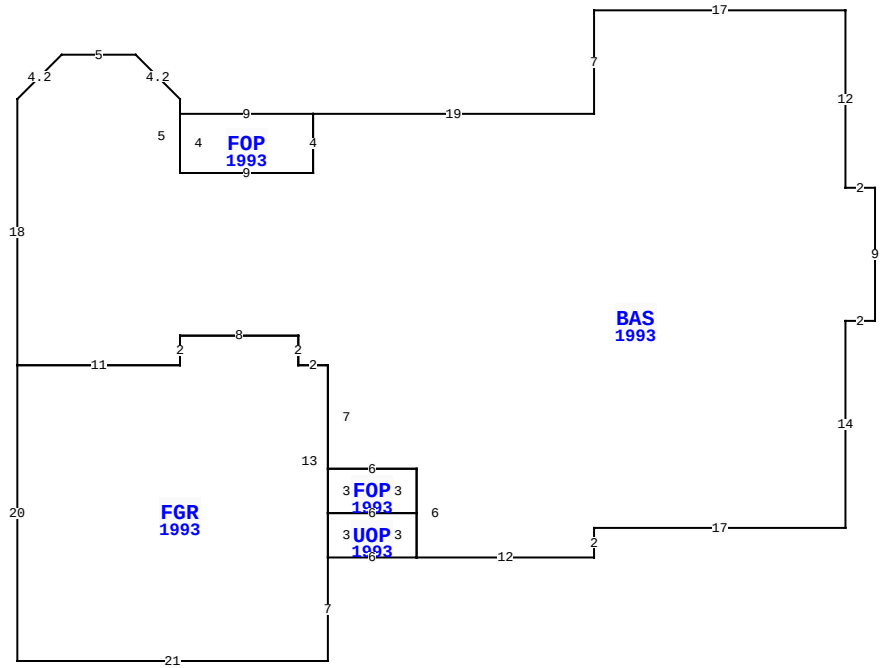

2721 DELOREAN ST, FERNANDINA BEACH

BLD DATE		LGL DATE	
XF DATE		LAND DATE	
INC DATE		AG DATE	

VALUATION SUMMARY

VALUATION BY	STANDARD
Tax Group: 8	Tax Dist:
BUILDING MARKET VALUE	242,297
TOTAL MARKET OB/XF VALUE	5,062
TOTAL LAND VALUE - MARKET	180,000
TOTAL MARKET VALUE	427,359
SOH/AGL Deduction	80,903
ASSESSED VALUE	346,456
TOTAL EXEMPTION VALUE	0
BASE TAXABLE VALUE	346,456
TOTAL JUST VALUE	427,359
NCON VALUE	0
INCOME VALUE	
PREVIOUS YEAR MKT VALUE	420,224

PERMIT NUM	DESCRIPTION	AMT	ISSUED
6779	NEW CONSTR	1,800	06/26/1990
03443	H/AC	2,300	06/26/1990
3963	NEW CONSTR	2,400	06/22/1990
6544	NEW CONSTR	52,692	06/19/1990

SALES DATA

OFF RECORD Number	DATE	TYPE INST	Q / U	V / I	RSN CD	SALE PRICE
1986/1113	5/27/2015	WD	Q	I	01	215,000
GRANTOR: AZAR MICHEL G & POLIA						
GRANTEE: MCKEE LORI A & TIMO						
1593/1350	11/18/2008	QC	Q	I	06	100
GRANTOR: MREICH IBRAHIM & MAAN						
GRANTEE: AZAR MICHEL G & POL						

BUILDING NOTES

BUILDING DIMENSIONS

BAS=[YR=1993] W2 N12 W17 S7 W19 FOP=[YR=1993] W9 S4 E9 N4 $ S4 W9 N5 U3 L3 W5 D3 L3 S18 FGR=[YR=1993] S20 E21 N7 UOP=[YR=1993] E6 N3 FOP=[YR=1993] N3 W6 S3E6 $ W6 S3 $ N13 W2 N2 W8 S2 W11 $ E11 N2 E8 S2 E2 S7 E6 S6E12 N2 E17 N14 E2 N9 $.

EXTRA FEATURES

LN	OB/XF CODE	DESCRIPTION	BLD	CAP	L	W	UNITS	UT	Adj R	ADJ UNIT PRICE	ORIG COND	YEAR ON	YEAR ACTUAL	Q	% COND	OB/XF MKT VALUE	NOTES
1	0500	FP-PRE FAB	0	0	0	0	1.00	UT	3,500.00	3,500.00	100	1990	1990	3	66	2,310	
2	0812	CONCRETE C	0	0	0	0	1,207.00	SF	4.00	4.00	100	1990	1990	3	57	2,752	

LAND DESCRIPTION

TOTAL OB/XF 5,062

LN	USE CODE	CLS	LAND USE DESCRIPTION	CAP	RD	LOC ZONE	FRONT	DEPTH	TOT LND UTS	UNIT TYPE	DT	DPTH FACT	% COND	TOT ADJ	UNIT PRICE	ADJ UNIT PRICE	LAND VALUE	OTHER ADJUSTMENTS AND NOTES	YEAR	DENSITY	DECL	FRZ	YR	CONSRV
1	000100	C	RES	0	0003	RSF-2	0.00	0.00	1.00	LT		1.00	1.00	1.00	180,000.00	180,000.00	180,000							

REVIEW DATE 01/31/2024 BY KBA Total Acres: 0.00 Total Land Value: 180,000 Market: 0 Agricultural: 0 Common: 180,000 PRINTED 07/30/2025 BY SYS