LOT 12 IN OR 718/282
EGANS BLUFF NORTH PB 5/272

PHILLIPS THOMAS C & SUSAN D
2757 STERLING COURT
FERNANDINA BEACH, FL 32034

2025

00-00-30-021N-0012-0000

BUILDING CHARACTERISTICS

ELEMENT	CD	CONSTRUCTION
Exterior Wall	16	WD FR STUC 100
Roof Structur	03	GABLE/HIP 100
Roof Cover	03	COMP SHNGL 100
Interior Wall	05	DRYWALL 100
Interior Floo	14	CARPET 60
Interior Floo	11	CLAY TILE 40
Air Condition	03	CENTRAL 100
Heating Type	04	AIR DUCTED 100
Bedrooms		4 100
Bathrooms		2.5 100
Frame	02	WOOD FRAME 100
Stories	1.5	1.5 100
Units		0 100
Occupancy	00	NONE 100
Quality	06	Quality Level 06
DOR CODE	0100	SINGLE FAMILY
MAP NUM		MKT AREA 02
NEIGHBORHOOD/LOC	2025.00	

AREA TYPE	TOTAL GROSS AREA	PCT OF BASE	YEAR	TOT ADJ AREA	SUBAREA MARKET VALUE
BAS	1,552	100	1993	1,552	222,672
BAS	78	100	2010	78	11,191
FGR	552	55	1993	304	43,616
FOP	56	30	1993	17	2,439
FUS	364	100	1993	364	52,224
PTO	120	5	1993	6	861
PTO	170	5	1993	8	1,148
TOTALS	2,892			2,329	334,151

MARKET ADJUSTMENTS

TYPE	MDL	EFF. AREA	TOT ADJ PTS	EFF. BASE RATE	REPL. COST NEW	AYB	EYB	ECON	FNCT		NORM	% COND
0900	01	2,329	130.9574	172.86	402,591	1990	1990	0	0	0	17.00	83.00

1 SNGL FAM – 100% - 1995 Heated Area: 1994 HX Base Yr 1995

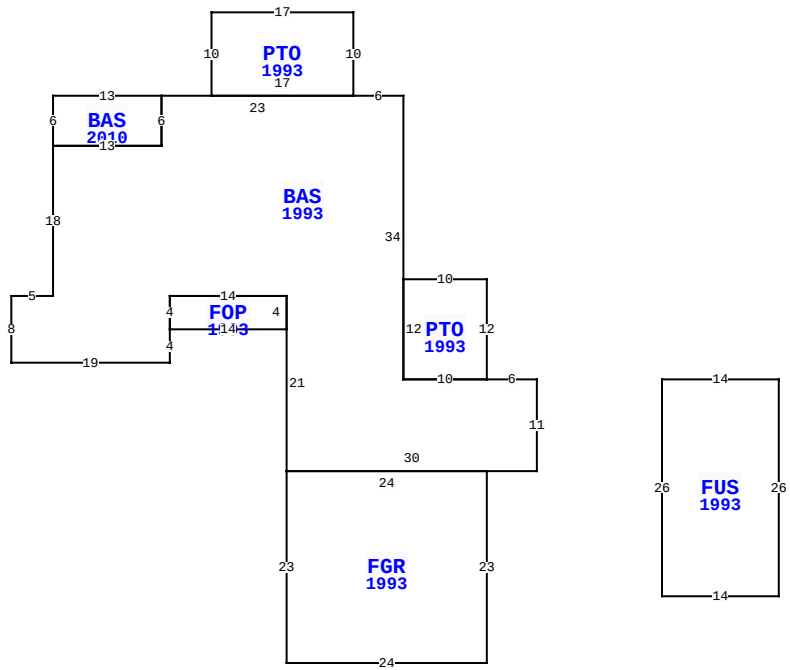

2757 STERLING CT, FERNANDINA BEACH

BLD DATE		LGL DATE	
XF DATE		LAND DATE	
INC DATE		AG DATE	

NASSAU COUNTY PROPERTY

PAGE 1 of 1 8

VALUATION SUMMARY

VALUATION BY		STANDARD
Tax Group: 8	Tax Dist:	
BUILDING MARKET VALUE		334,151
TOTAL MARKET OB/XF VALUE		4,462
TOTAL LAND VALUE - MARKET		216,000
TOTAL MARKET VALUE		554,613
SOH/AGL Deduction		387,320
ASSESSED VALUE		167,293
TOTAL EXEMPTION VALUE	HX HB	50,722
BASE TAXABLE VALUE		116,571
TOTAL JUST VALUE		554,613
NCON VALUE		0
INCOME VALUE		
PREVIOUS YEAR MKT VALUE		554,233

PERMIT NUM	DESCRIPTION	AMT	ISSUED
B23001	REPAIR/RRF	3,500	11/01/2009
B23004	REMODEL	14,000	11/01/2009
B22577	REMODEL	15,000	06/01/2009
V9900054	REMODEL	10,000	08/01/1999
03547	H/AC	1,900	09/27/1990
6935	NEW CONSTR	1,600	09/06/1990

SALES DATA

OFF RECORD Number	DATE	TYPE INST	Q U	V I	RSN CD	SALE PRICE
0718/0282	11/15/1994	WD	Q	I		112,500
GRANTOR: FELDER THOMAS W JR &						
GRANTEE: PHILLIPS THOMAS C &						
0612/0963	11/21/1990	WD	Q	I		105,100
GRANTOR: SEAWARD HOMES						
GRANTEE: FELDER TOM JR & K						

BUILDING NOTES

BUILDING DIMENSIONS

BAS=[YR=1993] W6 PTO=[YR=1993] N12 W10 S12 E10 $ W10 N34 W6 PTO=[YR=1993] N10 W17 S10 E17 $ W23 BAS=[YR=2010] W13 S6 E13 N6 $ S6 W13 S18 W5 S8 E19 N4 FOP=[YR=1993] E14 N4 W14 S4 $ N4 E14 S21 FGR=[YR=1993] S23 E24 N23 W24 $ E30 N11 $ PTR= E15 FUS=[YR=1993] E14 S26 W14 N26 $ W15 $.

EXTRA FEATURES

LN	OB/XF CODE	DESCRIPTION	BLD	CAP	L	W	UNITS	UT	Adj R	ADJ UNIT PRICE	ORIG COND	YEAR ON	YEAR ACTUAL	Q	% COND	OB/XF MKT VALUE	NOTES
1	0812	CONCRETE C	0	100	0	0	1,710.00	SF	4.00	4.00	100	1990	1990	3	57	3,899	
2	0940	SHEDS/PORT	0	100	14	10	140.00	SF	20.10	20.10	100	2001	2001	3	20	563	

LAND DESCRIPTION

TOTAL OB/XF 4,462

LN	USE CODE	CLS	LAND USE DESCRIPTION	CAP	RD	LOC ZONE	FRONT	DEPTH	TOT LND UTS	UNIT TYPE	DT	DPTH FACT	% COND	TOT ADJ	UNIT PRICE	ADJ UNIT PRICE	LAND VALUE	OTHER ADJUSTMENTS AND NOTES	YEAR	DENSITY	DECL	FRZ	YR	CONSRV
1	000100	C	RES	100	0003	RSF-2	0.00	0.00	1.00	LT		1.00	1.00	1.20	180,000.00	216,000.00	216,000							

REVIEW DATE 01/31/2024 BY KBA Total Acres: 0.00 Total Land Value: 216,000 Market: 0 Agricultural: 0 Common: 216,000 PRINTED 07/30/2025 BY SYS