LOT 11
EGANS LANDING PB 5/387-387B

CONTRERAS ERNESTO L GARCIA/TAYLER SHEILA MARILYN
2855 ROBERT OLIVER AV
FERNANDINA BEACH, FL 32034

2025

00-00-30-021L-0011-0000

NASSAU COUNTY PROPERTY

BUILDING CHARACTERISTICS

ELEMENT	CD	CONSTRUCTION
Exterior Wall	16	WD FR STUC 100
Roof Structur	03	GABLE/HIP 100
Roof Cover	03	COMP SHNGL 100
Interior Wall	05	DRYWALL 100
Interior Floo	14	CARPET 70
Interior Floo	11	CLAY TILE 30
Air Condition	03	CENTRAL 100
Heating Type	04	AIR DUCTED 100
Bedrooms		3 100
Bathrooms		2 100
Frame	02	WOOD FRAME 100
Stories	1.	1. 100
Units		0 100
Occupancy	00	NONE 100
Quality	06	Quality Level 06
DOR CODE	0100	SINGLE FAMILY
MAP NUM		MKT AREA 01
NEIGHBORHOOD/LOC	1076.00	

AREA TYPE	TOTAL GROSS AREA	PCT OF BASE	YEAR	TOT ADJ AREA	SUBAREA MARKET VALUE
BAS	1,691	100	1997	1,691	245,663
DCK	304	10	2008	30	4,359
FEP	130	80	2008	104	15,109
FGR	471	55	1997	259	37,627
FOP	30	30	1997	9	1,308
TOTALS	2,626			2,093	304,064

MARKET ADJUSTMENTS

TYPE	MDL	EFF. AREA	TOT ADJ PTS	EFF. BASE RATE	REPL. COST NEW	AYB	EYB	ECON	FNCT		NORM	% COND
0900	01	2,093	127.2383	167.95	351,519	1997	1997	0	0	0	13.50	86.50

1 SNGL FAM – 100% - 2015 Heated Area: 1691 HX Base Yr 2015

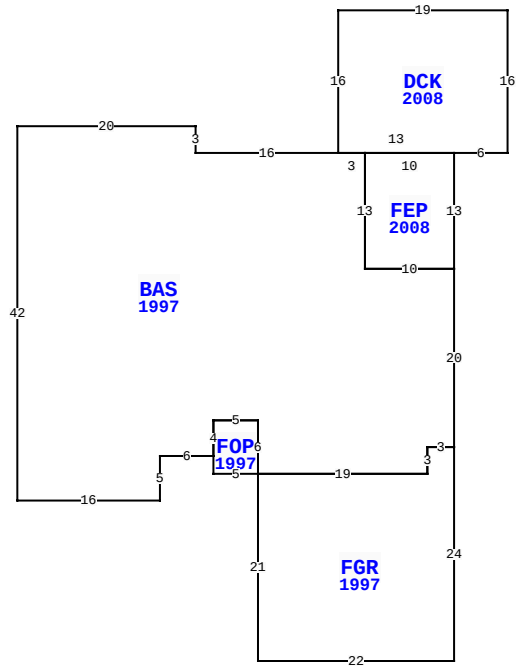

BLD DATE		LGL DATE	
XF DATE		LAND DATE	04/30/2025 MLU
INC DATE		AG DATE	

2855 ROBERT OLIVER AVE, FERNANDINA BEACH

VALUATION SUMMARY

VALUATION BY		STANDARD
Tax Group: 2	Tax Dist:	
BUILDING MARKET VALUE		304,064
TOTAL MARKET OB/XF VALUE		5,757
TOTAL LAND VALUE - MARKET		350,000
TOTAL MARKET VALUE		659,821
SOH/AGL Deduction		347,984
ASSESSED VALUE		311,837
TOTAL EXEMPTION VALUE	HX HB	50,722
BASE TAXABLE VALUE		261,115
TOTAL JUST VALUE		659,821
NCON VALUE		0
INCOME VALUE		
PREVIOUS YEAR MKT VALUE		550,443

PERMIT NUM	DESCRIPTION	AMT	ISSUED
20080473	ELEC OTHER	400	03/25/2008
20080250	XFOB	9,213	02/20/2008
B9610042	NEW CONSTR	83,032	09/18/1996

SALES DATA

OFF RECORD Number	DATE	TYPE INST	Q / U	V / I	RSN CD	SALE PRICE
2734/144	8/17/2024	QC	U	I	11	100
GRANTOR: GARCIA ERNESTO						
GRANTEE: CONTRERAS ERNESTO L						
1929/1270	7/24/2014	WD	Q	I	01	350,600
GRANTOR: SQUIRES WILLIAM T & K						
GRANTEE: GARCIA ERNESTO & SH						

BUILDING NOTES

BUILDING DIMENSIONS

BAS=[YR=1997] W16 N3 W20S42 E16 N5 E6 FOP=[YR=1997] S2 E5 FGR=[YR=1997] S21 E22 N24 W3 S3 W19$N6 W5 S4$ N4 E5 S6 E19 N3 E3 N20 FEP=[YR=2008] N13 DCK=[YR=2008] E6 N16 W19 S16 E13 $ W10 S13 E10$ W10 N13 W3$.

EXTRA FEATURES

LN	OB/XF CODE	DESCRIPTION	BLD	CAP	L	W	UNITS	UT	Adj R	ADJ UNIT PRICE	ORIG COND	YEAR ON	YEAR ACTUAL	Q	% COND	OB/XF MKT VALUE	NOTES
1	0500	FP-PRE FAB	0	100	0	0	1.00	UT	3,500.00	3,500.00	100	1997	1997	3	79	2,765	
2	0812	CONCRETE C	0	100	0	0	1,039.00	SF	4.00	4.00	100	1997	1997	3	72	2,992	

LAND DESCRIPTION

TOTAL OB/XF 5,757

LN	USE CODE	CLS	LAND USE DESCRIPTION	CAP	RD	LOC ZONE	FRONT	DEPTH	TOT LND UTS	UNIT TYPE	DT	DPTH FACT	% COND	TOT ADJ	UNIT PRICE	ADJ UNIT PRICE	LAND VALUE	OTHER ADJUSTMENTS AND NOTES	YEAR	DENSITY	DECL	FRZ	YR	CONSRV
1	000100	C	RES	100	0003	R-2	0.00	0.00	1.00	LT		1.00	1.00	1.00	350,000.00	350,000.00	350,000							

REVIEW DATE 08/26/2019 BY DJA Total Acres: 0.00 Total Land Value: 350,000 Market: 0 Agricultural: 0 Common: 350,000 PRINTED 07/30/2025 BY SYS