PT OF LOT 5 & S-1 OF LOT 4
IN OR 2599/478
EGANS LANDING PB 5/387-387B

BLACK FAMILY TRUST/BLACK ELIZE D BLACK TRUSTEE
3011 ROBERT OLIVER AVE
FERNANDINA BEACH, FL 32034

2025

00-00-30-021L-0005-0000

BUILDING CHARACTERISTICS

ELEMENT	CD	CONSTRUCTION
Exterior Wall	10	ABOVE AVG 100
Roof Structur	03	GABLE/HIP 100
Roof Cover	03	COMP SHNGL 100
Interior Wall	05	DRYWALL 100
Interior Floo	14	CARPET 70
Interior Floo	11	CLAY TILE 30
Air Condition	03	CENTRAL 100
Heating Type	04	AIR DUCTED 100
Bedrooms		3 100
Bathrooms		3 100
Frame	02	WOOD FRAME 100
Stories	1.	1. 100
Units		0 100
Occupancy	00	NONE 100
Quality	06	Quality Level 06
DOR CODE	0100	SINGLE FAMILY
MAP NUM		MKT AREA 01
NEIGHBORHOOD/LOC	1076.00	

AREA TYPE	TOTAL GROSS AREA	PCT OF BASE	YEAR	TOT ADJ AREA	SUBAREA MARKET VALUE
BAS	1,843	100	1999	1,843	269,193
FGR	449	55	1999	247	36,077
FOP	44	30	1999	13	1,899
FSP	145	40	1999	58	8,472
FUS	408	100	1999	408	59,594
UOP	438	20	2022	88	12,853
TOTALS	3,327			2,657	388,088

MARKET ADJUSTMENTS

TYPE	MDL	EFF. AREA	TOT ADJ PTS	EFF. BASE RATE	REPL. COST NEW	AYB	EYB	ECON	FNCT		NORM	% COND
0900	01	2,657	125.7456	165.98	441,009	1999	1999	0	0	0	12.00	88.00

1 SNGL FAM – 100% - 2022 Heated Area: 2251 HX Base Yr 2022

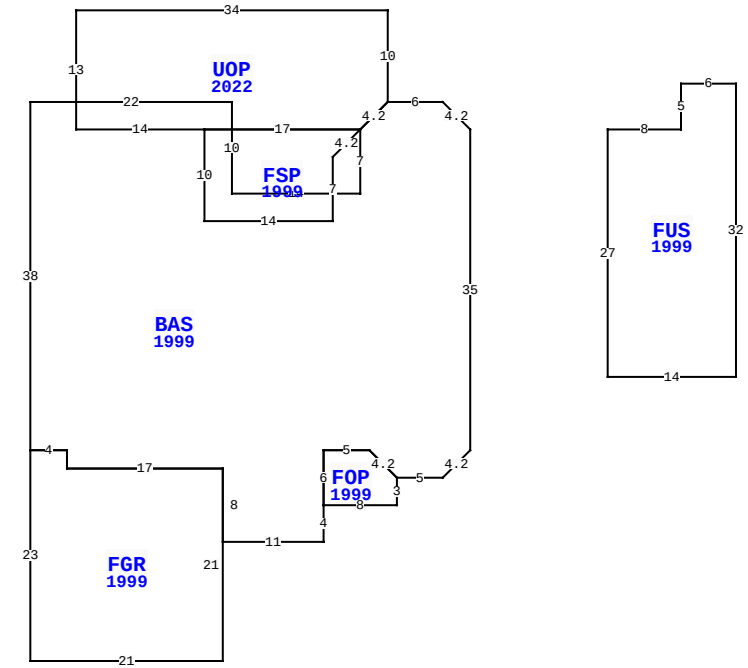

3011 ROBERT OLIVER AVE, FERNANDINA BEACH

BLD DATE		LGL DATE	
XF DATE		LAND DATE	04/30/2025 MLU
INC DATE		AG DATE	

NASSAU COUNTY PROPERTY

PAGE 1 of 1 2

VALUATION SUMMARY

VALUATION BY		STANDARD
Tax Group: 2	Tax Dist:	
BUILDING MARKET VALUE		388,088
TOTAL MARKET OB/XF VALUE		6,279
TOTAL LAND VALUE - MARKET		350,000
TOTAL MARKET VALUE		744,367
SOH/AGL Deduction		181,777
ASSESSED VALUE		562,590
TOTAL EXEMPTION VALUE	HX HB	50,722
BASE TAXABLE VALUE		511,868
TOTAL JUST VALUE		744,367
NCON VALUE		0
INCOME VALUE		
PREVIOUS YEAR MKT VALUE		626,066

PERMIT NUM	DESCRIPTION	AMT	ISSUED
20211162	ADDITION	0	03/29/2021
20122560	WTRHTR	800	12/26/2012
20101651	H/AC	5,500	09/22/2010
20051461	REPAIR/RRF	8,000	03/23/2005
B990076	NEW CONSTR	119,112	03/19/1999

SALES DATA

OFF RECORD Number	DATE	TYPE INST	Q U	V I	RSN CD	SALE PRICE
2599/0478	10/17/2022	WD	U	I	11	100
GRANTOR: BLACK ELZIE D & MARCI						
GRANTEE: BLACK FAMILY TRUST						
2055/1555	6/29/2016	WD	Q	I	01	425,000
GRANTOR: GREENFIELD GARY I & N						
GRANTEE: BLACK ELZIE D & MAR						

BUILDING NOTES

BUILDING DIMENSIONS

BAS=[YR=1999] L3 U3 W6 UOP=[YR=2022] N10 W34 S13 E14 FSP=[YR=1999] E17 L3 D3 S7 W14 N10$ E17 U3 R3 $ L3 D3 S7 W14 N10 W22 S38 FGR=[YR=1999] S23 E21 N21 W17 N2 W4 $ E4 S2 E17 S8 E11 N4 FOP=[YR=1999] E8 N3 L3 U3 W5 S6$ N6E5 D3 R3 E5 U3 R3 N35 $ PTR= E15 FUS=[YR=1999] E8 N5 E6 S32 W14 N27 $ W15 $.

EXTRA FEATURES

LN	OB/XF CODE	DESCRIPTION	BLD	CAP	L	W	UNITS	UT	Adj R	ADJ UNIT PRICE	ORIG COND	YEAR ON	YEAR ACTUAL	Q	% COND	OB/XF MKT VALUE	NOTES
1	0810	CONCRETE A	0	100	0	0	572.00	SF	6.50	6.50	100	1999	1999	3	75	2,789	
2	0810	CONCRETE A	0	100	34	3	102.00	SF	6.50	6.50	100	1999	1999	3	75	497	
3	0911	SCRN RM A	0	100	0	0	190.00	SF	17.50	17.50	100	2021	2021	3	90	2,993	

LAND DESCRIPTION

TOTAL OB/XF 6,279

LN	USE CODE	CLS	LAND USE DESCRIPTION	CAP	RD	LOC ZONE	FRONT	DEPTH	TOT LND UTS	UNIT TYPE	DT	DPTH FACT	% COND	TOT ADJ	UNIT PRICE	ADJ UNIT PRICE	LAND VALUE	OTHER ADJUSTMENTS AND NOTES	YEAR	DENSITY	DECL	FRZ	YR	CONSRV
1	000100	C	RES	100	0003	R-2	0.00	0.00	1.00	LT		1.00	1.00	1.00	350,000.00	350,000.00	350,000							

REVIEW DATE 02/15/2022 BY DJ Total Acres: 0.00 Total Land Value: 350,000 Market: 0 Agricultural: 0 Common: 350,000 PRINTED 07/30/2025 BY SYS