LOT 63
IN OR 2020/829
EGANS BLUFF #3 PB 5/243

JACOBS LAWRENCE A & KATHARINE
2055 LINDSAY RD
DANDRIDGE, TN 37725

2025

00-00-30-021C-0063-0000

NASSAU COUNTY PROPERTY

BUILDING CHARACTERISTICS

ELEMENT	CD	CONSTRUCTION
Exterior Wall	16	WD FR STUC 100
Roof Structur	03	GABLE/HIP 100
Roof Cover	03	COMP SHNGL 100
Interior Wall	05	DRYWALL 100
Interior Floo	14	CARPET 80
Interior Floo	11	CLAY TILE 20
Air Condition	03	CENTRAL 100
Heating Type	04	AIR DUCTED 100
Bedrooms		3 100
Bathrooms		2.5 100
Frame	02	WOOD FRAME 100
Stories	1.	1. 100
Units		0 100
Occupancy	00	NONE 100
Quality	06	Quality Level 06
DOR CODE	0100	SINGLE FAMILY
MAP NUM		MKT AREA 02
NEIGHBORHOOD/LOC	2031.00	

AREA TYPE	TOTAL GROSS AREA	PCT OF BASE	YEAR	TOT ADJ AREA	SUBAREA MARKET VALUE
BAS	2,261	100	1993	2,261	302,475
FGR	527	55	1993	290	38,796
FOP	36	30	1993	11	1,472
FOP	63	30	1993	19	2,541
FOP	74	30	1993	22	2,943
TOTALS	2,961			2,603	348,228

MARKET ADJUSTMENTS

TYPE	MDL	EFF. AREA	TOT ADJ PTS	EFF. BASE RATE	REPL. COST NEW	AYB	EYB	ECON	FNCT		NORM	% COND
0900	01	2,603	122.1024	161.18	419,552	1990	1990	0	0	0	17.00	83.00

1 SNGL FAM – 0% - 0 Heated Area: 2261 HX Base Yr

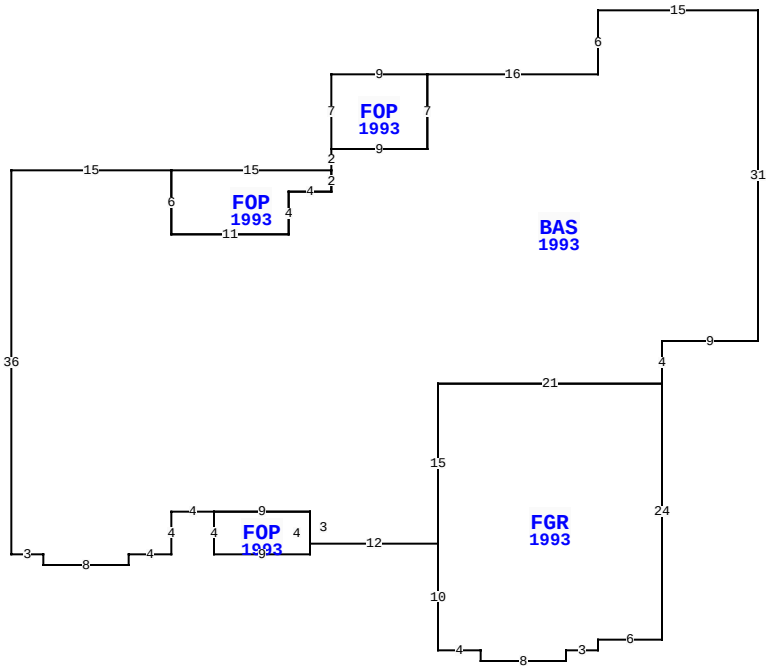

BLD DATE		LGL DATE	
XF DATE		LAND DATE	04/28/2025 MLU
INC DATE		AG DATE	

2815 E PARK SQUARE PL, FERNANDINA BEACH

VALUATION SUMMARY

VALUATION BY	STANDARD
Tax Group: 8	Tax Dist:
BUILDING MARKET VALUE	348,228
TOTAL MARKET OB/XF VALUE	7,068
TOTAL LAND VALUE - MARKET	275,000
TOTAL MARKET VALUE	630,296
SOH/AGL Deduction	108,169
ASSESSED VALUE	522,127
TOTAL EXEMPTION VALUE	0
BASE TAXABLE VALUE	522,127
TOTAL JUST VALUE	630,296
NCON VALUE	0
INCOME VALUE	
PREVIOUS YEAR MKT VALUE	589,049

PERMIT NUM	DESCRIPTION	AMT	ISSUED
M1318671	H/AC	0	08/01/2013
6482	NEW CONSTR	90,468	05/13/1990

SALES DATA

OFF RECORD Number	DATE	TYPE INST	Q U /	V I /	RSN CD	SALE PRICE
2020/0829	12/22/2015	WD	Q	I	01	415,000
GRANTOR: AYERS DANIEL O & REBE						
GRANTEE: JACOBS LAWRENCE A &						
1813/0589	9/07/2012	WD	Q	I	02	340,000
GRANTOR: GAFFNEY CAROL A						
GRANTEE: AYERS DANIEL O & RE						

BUILDING NOTES

BUILDING DIMENSIONS

BAS=[YR=1993] W15 S6 W16 FOP=[YR=1993] W9 S7 E9 N7$ S7 W9 S2 FOP=[YR=1993] W15 S6 E11 N4 E4 N2$ S2 W4 S4 W11 N6 W15 S36E3 S1 E8 N1 E4 N4 E4 FOP=[YR=1993] S4 E9N4 W9$ E9 S3 E12 FGR=[YR=1993] S10 E4 S1E8 N1 E3 N1 E6 N24 W21 S15$ N15 E21 N4 E9 N31$.

EXTRA FEATURES

LN	OB/XF CODE	DESCRIPTION	BLD	CAP	L	W	UNITS	UT	Adj R	ADJ UNIT PRICE	ORIG COND	YEAR ON	YEAR ACTUAL	Q	% COND	OB/XF MKT VALUE	NOTES
1	0500	FP-PRE FAB	0	0	0	0	1.00	UT	3,500.00	3,500.00	100	1990	1990	3	66	2,310	
2	0812	CONCRETE C	0	0	0	0	1,557.00	SF	4.00	4.00	100	1990	1990	3	57	3,550	
3	0825	BRICK	0	0	0	0	105.00	SF	12.50	12.50	100	1998	1998	3	92	1,208	

LAND DESCRIPTION

TOTAL OB/XF 7,068

LN	USE CODE	CLS	LAND USE DESCRIPTION	CAP	RD	LOC ZONE	FRONT	DEPTH	TOT LND UTS	UNIT TYPE	DT	DPTH FACT	% COND	TOT ADJ	UNIT PRICE	ADJ UNIT PRICE	LAND VALUE	OTHER ADJUSTMENTS AND NOTES	YEAR	DENSITY	DECL	FRZ	YR	CONSRV
1	000100	C	RES	0		RSF-2	0.00	0.00	1.00	LT		1.00	1.00	1.00	275,000.00	275,000.00	275,000							

REVIEW DATE 01/14/2021 BY KBA Total Acres: 0.00 Total Land Value: 275,000 Market: 0 Agricultural: 0 Common: 275,000 PRINTED 07/30/2025 BY SYS