LOT 31
IN OR 1421/1931
EGANS BLUFF #3 PB 5/243

VENERDI PETER E III & LAURA A
2797 PARK SQUARE PLACE
FERNANDINA BEACH, FL 32034

2025

00-00-30-021C-0031-0000

BUILDING CHARACTERISTICS

ELEMENT	CD	CONSTRUCTION
Exterior Wall	10	ABOVE AVG 100
Roof Structur	08	IRREGULAR 100
Roof Cover	03	COMP SHNGL 100
Interior Wall	05	DRYWALL 100
Interior Floo	11	CLAY TILE 50
Interior Floo	14	CARPET 50
Air Condition	03	CENTRAL 100
Heating Type	04	AIR DUCTED 100
Bedrooms		4 100
Bathrooms		3.5 100
Frame	02	WOOD FRAME 100
Stories	2.	2. 100
Units		0 100
Occupancy	00	NONE 100
Quality	06	Quality Level 06
DOR CODE	0100	SINGLE FAMILY
MAP NUM		MKT AREA 02
NEIGHBORHOOD/LOC	2031.00	

AREA TYPE	TOTAL GROSS AREA	PCT OF BASE	YEAR	TOT ADJ AREA	SUBAREA MARKET VALUE
BAS	1,985	100	2000	1,985	282,007
FGR	624	55	2000	343	48,730
FOP	8	30	2000	2	284
FOP	182	30	2000	55	7,814
FOP	262	30	2000	79	11,224
FST	96	55	2000	53	7,530
FUS	498	100	2000	498	70,750
FUS	608	100	2000	608	86,378
PTO	9	5	2000	0	0
PTO	24	5	2000	1	142
TOTALS	4,309			3,626	515,143

MARKET ADJUSTMENTS

TYPE	MDL	EFF. AREA	TOT ADJ PTS	EFF. BASE RATE	REPL. COST NEW	AYB	EYB	ECON	FNCT		NORM	% COND
0900	01	3,626	121.6125	160.53	582,082	2000	2000	0	0	0	11.50	88.50

1 SNGL FAM – 100% - 2007 Heated Area: 3091 HX Base Yr 2007

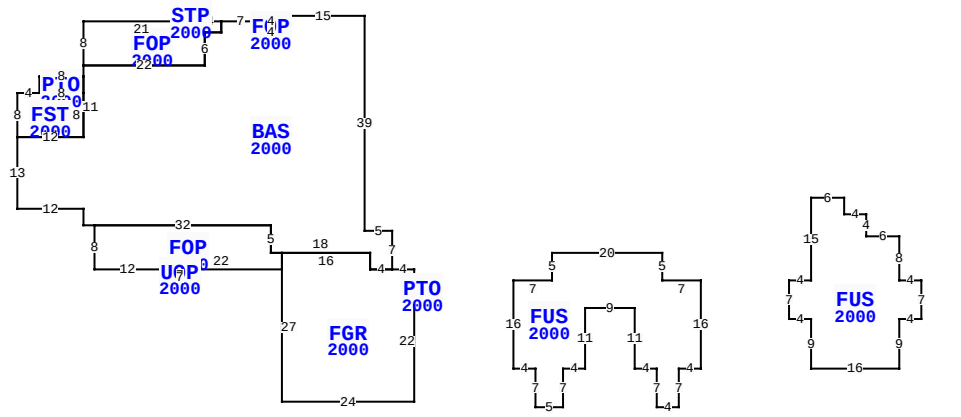

** This building has 12 Sub-Areas

2797 PARK SQUARE PL, FERNANDINA BEACH

BLD DATE		LGL DATE	
XF DATE		LAND DATE	04/28/2025 MLU
INC DATE		AG DATE	

NASSAU COUNTY PROPERTY

PAGE 1 of 1 8

VALUATION SUMMARY

VALUATION BY		STANDARD
Tax Group: 8	Tax Dist:	
BUILDING MARKET VALUE		515,143
TOTAL MARKET OB/XF VALUE		20,810
TOTAL LAND VALUE - MARKET		343,750
TOTAL MARKET VALUE		879,703
SOH/AGL Deduction		469,519
ASSESSED VALUE		410,184
TOTAL EXEMPTION VALUE	HX HB	50,722
BASE TAXABLE VALUE		359,462
TOTAL JUST VALUE		879,703
NCON VALUE		0
INCOME VALUE		
PREVIOUS YEAR MKT VALUE		824,117

PERMIT NUM	DESCRIPTION	AMT	ISSUED
B2006778	ADDITION	10,939	11/12/2020
B006847	NEW CONSTR	250,000	02/01/2000

SALES DATA

OFF RECORD Number	DATE	TYPE INST	Q U	V I	RSN CD	SALE PRICE
1421/1931	6/21/2006	WD	Q	I		691,500
GRANTOR: CARTUS FINANCIAL CORP						
GRANTEE: VENERDI PETER E III						
1421/1928	6/21/2006	WD	Q	I		691,500
GRANTOR: HOUSE LANCE L & PATRI						
GRANTEE: CARTUS FINANCIAL CO						

BUILDING NOTES

BUILDING DIMENSIONS

PTO=[YR=2000] W3 FGR=[YR=2000] N2 W4 BAS=[YR=2000] N7 W5 N39 W15 S1 FOP=[YR=2000] W4 S2 E4 N2 $ S2 W4 N2 W7 FOP=[YR=2000] W4 STP=[YR=2000] N2 W3 S2 E3 $ W21 S8 E22 N6 E3 N2 $ S2 W3 S6 W22 S2 PTO=[YR=2000] W8 S3 FST=[YR=2000] W4 S8 E12 N8 W8 $ E8 N3 $ S11 W12 S13 E12 S3 E2 FOP=[YR=2000] S8 E12 UOP=[YR=2000] S1 E7 N1 W7 $ E22 N3 W2 N5 W32 $ E32 S5 E18 S3 E4 $ W4 N3 W16 S27 E24 N22 $ S3 E3 N3 $ PTR= E15 FUS=[YR=2000] E7 N5 E20 S5 E7 S16 W4 S7 W4 N7 W4 N11 W9 S11 W4 S7 W5 N7 W4 N16 $ W15 $ PTR= E65 FUS=[YR=2000] E4 N15 E6 S3 E4 S4 E6 S8 E4 S7 W4 S9 W16 N9 W4 N7 $ W65 $.

EXTRA FEATURES

LN	OB/XF CODE	DESCRIPTION	BLD	CAP	L	W	UNITS	UT	Adj R	ADJ UNIT PRICE	ORIG COND	YEAR ON	YEAR ACTUAL	Q	% COND	OB/XF MKT VALUE	NOTES
1	0855	CONC PAVER	0	100	0	0	1,827.00	SF	10.00	10.00	100	2020	2020	3	98	17,905	
2	0500	FP-PRE FAB	0	100	0	0	1.00	UT	3,500.00	3,500.00	100	2000	2000	3	83	2,905	

LAND DESCRIPTION

TOTAL OB/XF 20,810

LN	USE CODE	CLS	LAND USE DESCRIPTION	CAP	RD	LOC ZONE	FRONT	DEPTH	TOT LND UTS	UNIT TYPE	DT	DPTH FACT	% COND	TOT ADJ	UNIT PRICE	ADJ UNIT PRICE	LAND VALUE	OTHER ADJUSTMENTS AND NOTES	YEAR	DENSITY	DECL	FRZ	YR	CONSRV
1	000100	C	RES	100		RSF-2	0.00	0.00	1.00	LT		1.00	1.00	1.25	275,000.00	343,750.00	343,750							

REVIEW DATE 11/29/2021 BY DJ Total Acres: 0.00 Total Land Value: 343,750 Market: 0 Agricultural: 0 Common: 343,750 PRINTED 07/30/2025 BY SYS