LOT 24 (EX S2 FT) & LOT 25
IN OR 2205/1958
EGANS BLUFF #3 PB 5/243

RUSHING WILLIAM D & HOLLEY L
2802 PARK SQUARE PLACE EAST
FERNANDINA BEACH, FL 32034

2025

00-00-30-021C-0024-0000

NASSAU COUNTY PROPERTY

BUILDING CHARACTERISTICS

ELEMENT	CD	CONSTRUCTION
Exterior Wall	20	FACE BRICK 100
Roof Structur	03	GABLE/HIP 100
Roof Cover	03	COMP SHNGL 100
Interior Wall	05	DRYWALL 100
Interior Floo	14	CARPET 60
Interior Floo	12	HARDWOOD 40
Air Condition	03	CENTRAL 100
Heating Type	04	AIR DUCTED 100
Bedrooms		4 100
Bathrooms		3.5 100
Frame	02	WOOD FRAME 100
Stories	2.	2. 100
Units		0 100
Occupancy	00	NONE 100
Quality	06	Quality Level 06

DOR CODE 0100 SINGLE FAMILY
MAP NUM | MKT AREA 02
NEIGHBORHOOD/LOC 2031.00

AREA TYPE	TOTAL GROSS AREA	PCT OF BASE	YEAR	TOT ADJ AREA	SUBAREA MARKET VALUE
BAS	2,143	100	1993	2,143	248,853
FGR	644	55	1993	354	41,108
FOP	484	30	2025	145	16,838
FUS	1,482	100	1993	1,482	172,096
UOP	72	20	1993	14	1,626
UOP	168	20	1993	34	3,948
UOP	660	20	1993	132	15,329
TOTALS	5,653			4,304	499,797

MARKET ADJUSTMENTS

TYPE	MDL	EFF. AREA	TOT ADJ PTS	EFF. BASE RATE	REPL. COST NEW	AYB	EYB	ECON	FNCT		NORM	% COND
0900	01	4,304	110.3080	145.61	626,705	1992	1997	0	0	0	20.25	79.75

1 SNGL FAM – 100% - 2019 Heated Area: 3625 HX Base Yr 2019

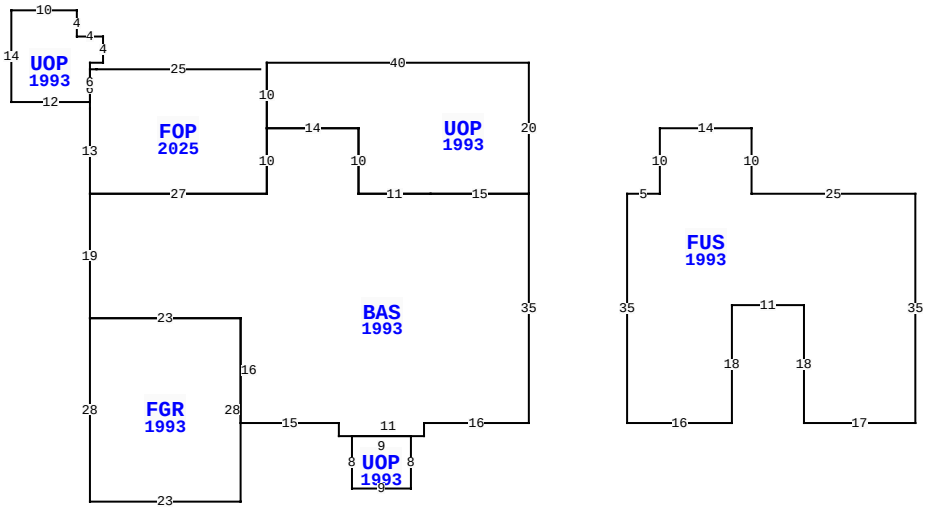

2802 E PARK SQUARE PL, FERNANDINA BEACH

BLD DATE		LGL DATE	
XF DATE		LAND DATE	04/28/2025 MLU
INC DATE		AG DATE	

VALUATION SUMMARY

VALUATION BY		STANDARD
Tax Group: 8	Tax Dist:	
BUILDING MARKET VALUE		499,797
TOTAL MARKET OB/XF VALUE		13,885
TOTAL LAND VALUE - MARKET		701,250
TOTAL MARKET VALUE		1,214,932
SOH/AGL Deduction		597,741
ASSESSED VALUE		617,191
TOTAL EXEMPTION VALUE	HX HB	50,722
BASE TAXABLE VALUE		566,469
TOTAL JUST VALUE		1,214,932
NCON VALUE		7,810
INCOME VALUE		
PREVIOUS YEAR MKT VALUE		1,109,827

PERMIT NUM	DESCRIPTION	AMT	ISSUED
B240003246	FOP OVR DCK	16,852	03/20/2024
R1313313	ROOF	2,200	01/01/2013
7741	NEW CONSTR	139,076	12/27/1991

SALES DATA

OFF RECORD Number	DATE	TYPE INST	Q / U	V / I	RSN CD	SALE PRICE
2205/1958	6/25/2018	WD	Q	I	01	635,000
GRANTOR: ALMAND AMOS JR REVOCA						
GRANTEE: RUSHING WILLIAM D &						
1643/0716	9/17/2009	QC	U	I	11	100
GRANTOR: ALMAND AMOS F JR						
GRANTEE: ALMAND AMOS F JR TR						

BUILDING NOTES

EXTRA FEATURES

LN	OB/XF CODE	DESCRIPTION	BLD	CAP	L	W	UNITS	UT	Adj R	ADJ UNIT PRICE	ORIG COND	YEAR ON	YEAR ACTUAL	Q	% COND	OB/XF MKT VALUE	NOTES
1	0504	FP-ELECTRI	0	100	0	0	1.00	UT	2,000.00	2,000.00	100	1992	1992	3	70	1,400	
2	0812	CONCRETE C	0	100	0	0	1,885.00	SF	4.00	4.00	100	1992	1992	3	62	4,675	
3	0501	FP-AVERAGE	0	100	0	0	1.00	UT	5,000.00	5,000.00	100	2025	2024		100	5,000	
4	0855	CONC PAVER	0	100	0	0	281.00	SF	10.00	10.00	100	2025	2015		100	2,810	

BUILDING DIMENSIONS

BAS=[YR=1993;ORIG=0,0] W15 W11 N10 W14 S10 W27 S19 E23 S16 E15 S2 E2 E11 N2 E16 N35 $
FUS=[YR=1993;ORIG=15,0] E5 N10 E14 S10 E25 S35 W17 N18 W11 S18 W16 N35 $
FGR=[YR=1993;ORIG=-67,19] S28 E23 N28 W23 $
UOP=[YR=1993;ORIG=-27,37] S8 E9 N8 W9 $
PTR=[ORIG=0,0] E15 W15 $
UOP=[YR=1993;ORIG=-40,-20] S10 E14 S10 E11 E15 N20 W40 $
FOP=[YR=2025;ORIG=-40,-20] S10 S10 W27 U13L0 U6R0 U0R1 D0R25 $
UOP=[YR=1993;ORIG=-65,-20] N4 W4 N4 W10 S14 E12 N6 E2 $
.

LAND DESCRIPTION

TOTAL OB/XF 13,885

LN	USE CODE	CLS	LAND USE DESCRIPTION	CAP	RD	LOC ZONE	FRONT	DEPTH	TOT LND UTS	UNIT TYPE	DT	DPTH FACT	% COND	TOT ADJ	UNIT PRICE	ADJ UNIT PRICE	LAND VALUE	OTHER ADJUSTMENTS AND NOTES	YEAR	DENSITY	DECL	FRZ	YR	CONSRV
1	000100	C	RES	100		RSF-2	0.00	0.00	2.00	LT		1.00	1.00	1.28	275,000.00	350,625.00	701,250							

REVIEW DATE 08/07/2024 BY DJ Total Acres: 0.00 Total Land Value: 701,250 Market: 0 Agricultural: 0 Common: 701,250 PRINTED 07/30/2025 BY SYS