LOT 85
EGANS BLUFF #2 PB 5/102

GALLUP JORDAN & JACQUELINE
1908 SPRINGBROOK RD
FERNANDINA BEACH, FL 32034

2025

00-00-30-021B-0085-0000

BUILDING CHARACTERISTICS

ELEMENT	CD	CONSTRUCTION
Exterior Wall	20	FACE BRICK 80
Exterior Wall	05	AVERAGE 20
Roof Structur	03	GABLE/HIP 100
Roof Cover	03	COMP SHNGL 100
Interior Wall	05	DRYWALL 100
Interior Floo	14	CARPET 90
Interior Floo	11	CLAY TILE 10
Air Condition	03	CENTRAL 100
Heating Type	04	AIR DUCTED 100
Bedrooms		3 100
Bathrooms		2.5 100
Frame	02	WOOD FRAME 100
Stories	1.	1. 100
Units		0 100
BUD8 Adjustme	05	DIST 1A 100
Occupancy	00	NONE 100
Quality	06	Quality Level 06

DOR CODE	0100	SINGLE FAMILY	
MAP NUM		MKT AREA	02
NEIGHBORHOOD/LOC	2031.00		

AREA TYPE	TOTAL GROSS AREA	PCT OF BASE	YEAR	TOT ADJ AREA	SUBAREA MARKET VALUE
BAS	2,168	100	1993	2,168	262,081
FGR	735	55	1993	404	48,838
FOP	15	30	1993	4	483
TOTALS	2,918			2,576	311,402

MARKET ADJUSTMENTS

TYPE	MDL	EFF. AREA	TOT ADJ PTS	EFF. BASE RATE	REPL. COST NEW	AYB	EYB	ECON	FNCT		NORM	% COND
0900	01	2,576	121.1088	159.86	411,799	1987	1987	0	0	0	24.38	75.62

1 SNGL FAM – 100% - 2021 Heated Area: 2168 HX Base Yr 2021

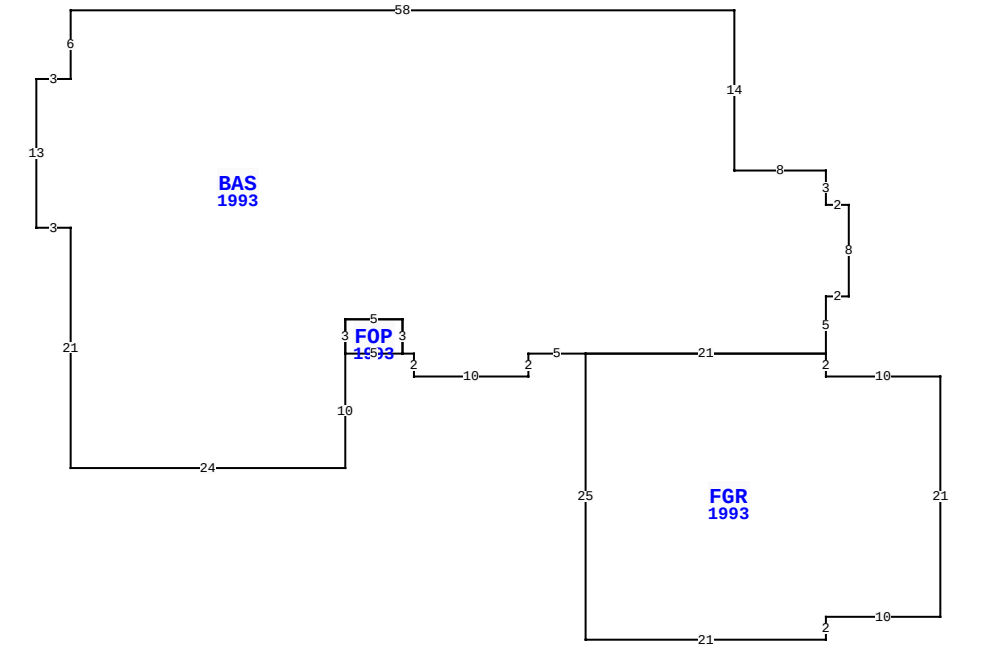

1908 SPRINGBROOK RD, FERNANDINA BEACH

BLD DATE		LGL DATE	
XF DATE		LAND DATE	04/28/2025 MLU
INC DATE		AG DATE	

NASSAU COUNTY PROPERTY

PAGE 1 of 1 8

VALUATION SUMMARY

VALUATION BY		STANDARD
Tax Group: 8	Tax Dist:	
BUILDING MARKET VALUE		311,402
TOTAL MARKET OB/XF VALUE		67,005
TOTAL LAND VALUE - MARKET		275,000
TOTAL MARKET VALUE		653,407
SOH/AGL Deduction		247,326
ASSESSED VALUE		406,081
TOTAL EXEMPTION VALUE	HX HB	50,722
BASE TAXABLE VALUE		355,359
TOTAL JUST VALUE		653,407
NCON VALUE		63,663
INCOME VALUE		
PREVIOUS YEAR MKT VALUE		551,852

PERMIT NUM	DESCRIPTION	AMT	ISSUED
SP230012084	861-452 855-795	75,000	09/21/2023
R1313585	REPAIR/RRF	13,450	08/01/2013

SALES DATA

OFF RECORD Number	DATE	TYPE INST	Q U	V I	RSN CD	SALE PRICE
2326/1555	12/17/2019	WD	Q	I	01	415,000
GRANTOR: STANDISH WELLES A & B						
GRANTEE: GALLUP JORDAN & JAC						
0528/0399	10/07/1987	WD	Q	I		152,000
GRANTOR: ALMAND AMOS F JR						
GRANTEE: STANDISH WELLES & B						

BUILDING NOTES

BUILDING DIMENSIONS

BAS=[YR=1993;ORIG=0,0] W2 N3 W8 N14 W58 S6 W3 S13 E3 S21 E24 N10 N3 E5 S3 E1 S2 E10 N2 E5 E21 N5 E2 N8 $
FGR=[YR=1993;ORIG=-23,13] S25 E21 N2 E10 N21 W10 N2 W21 $
FOP=[YR=1993;ORIG=-44,13] E5 N3 W5 S3 $
.

EXTRA FEATURES

LN	OB/XF CODE	DESCRIPTION	BLD	CAP	L	W	UNITS	UT	Adj R	ADJ UNIT PRICE	ORIG COND	YEAR ON	YEAR ACTUAL	Q	% COND	OB/XF MKT VALUE	NOTES
1	0811	CONCRETE B	0	100	52	16	832.00	SF	5.20	5.20	100	1987	1987	3	49.5	2,142	
2	0504	FP-ELECTRI	0	100	0	0	1.00	UT	2,000.00	2,000.00	100	1987	1987	3	60	1,200	
4	0861	POOL GUNIT	0	100	0	0	452.00	SF	85.00	85.00	100	2025	2024		100	38,420	
5	0855	CONC PAVER	0	100	0	0	1,588.00	SF	10.00	10.00	100	2025	2024		100	15,880	
6	0811	CONCRETE B	0	100	0	0	1,539.00	SF	5.20	5.20	100	2025	2024		100	8,003	
7	0855	CONC PAVER	0	100	34	4	136.00	SF	10.00	10.00	100	2025	2024		100	1,360	

LAND DESCRIPTION

TOTAL OB/XF 67,005

LN	USE CODE	CLS	LAND USE DESCRIPTION	CAP	RD	LOC ZONE	FRONT	DEPTH	TOT LND UTS	UNIT TYPE	DT	DPTH FACT	% COND	TOT ADJ	UNIT PRICE	ADJ UNIT PRICE	LAND VALUE	OTHER ADJUSTMENTS AND NOTES	YEAR	DENSITY	DECL	FRZ	YR	CONSRV
1	000100	C	RES	100		RSF-2	0.00	0.00	1.00	LT		1.00	1.00	1.00	275,000.00	275,000.00	275,000							

REVIEW DATE 04/23/2024 BY DJ Total Acres: 0.00 Total Land Value: 275,000 Market: 0 Agricultural: 0 Common: 275,000 PRINTED 07/30/2025 BY SYS