LOT 16
IN OR 2269/693
BELLE GLADE SUB PBK 3/55

DRYDEN JO ELLEN C & THOMAS ELMO
5005 ANTHONY ST
FERNANDINA BEACH, FL 32034

2025

00-00-30-0140-0016-0000

BUILDING CHARACTERISTICS

ELEMENT	CD	CONSTRUCTION
Exterior Wall	31	HARDIE BRD 100
Roof Structur	03	GABLE/HIP 100
Roof Cover	03	COMP SHNGL 100
Interior Wall	05	DRYWALL 100
Interior Floo	13	LVT/LAMNT 100
Interior Floo	11	CLAY TILE 0
Air Condition	03	CENTRAL 100
Heating Type	04	AIR DUCTED 100
Bedrooms		3 100
Bathrooms		3 100
Frame	02	WOOD FRAME 100
Stories	1.	1. 100
Units		0 100
Occupancy	00	NONE 100
Quality	05	Quality Level 05
DOR CODE	0100	SINGLE FAMILY
MAP NUM		MKT AREA 03
NEIGHBORHOOD/LOC	3047.00	

AREA TYPE	TOTAL GROSS AREA	PCT OF BASE	YEAR	TOT ADJ AREA	SUBAREA MARKET VALUE
BAS	2,485	100	2025	2,485	557,162
FGR	710	55	2025	390	87,442
FOP	106	30	2025	32	7,175
FOP	220	30	2025	66	14,798
FST	15	55	2025	8	1,794
TOTALS	3,536			2,981	668,370

MARKET ADJUSTMENTS

TYPE	MDL	EFF. AREA	TOT ADJ PTS	EFF. BASE RATE	REPL. COST NEW	AYB	EYB	ECON	FNCT		NORM	% COND
0500	11	2,981	141.9024	224.21	668,370	2024	2024	0	0	0	0.00	100.00

1 SFR CUST – 100% - 2025 Heated Area: 2485 HX Base Yr 2025

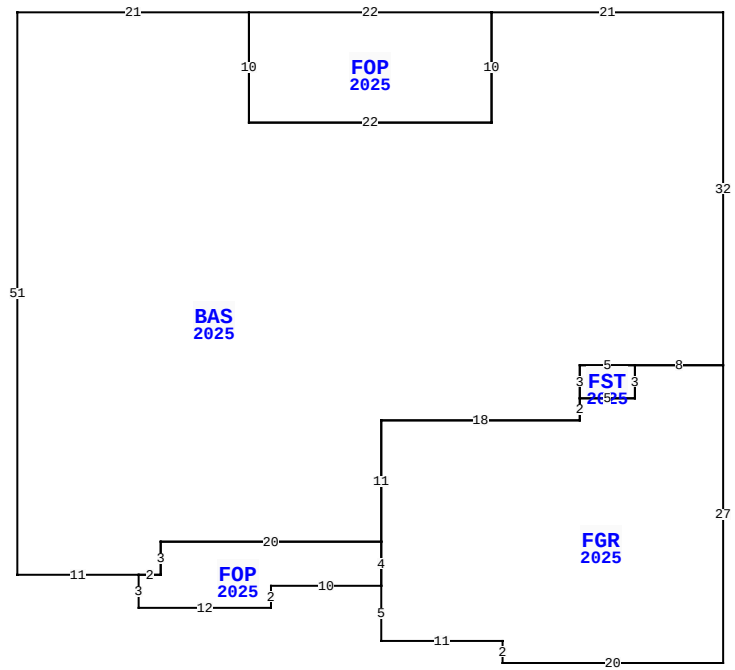

5005 ANTHONY ST, FERNANDINA BEACH

BLD DATE		LGL DATE	
XF DATE		LAND DATE	04/14/2025 MLU
INC DATE		AG DATE	

NASSAU COUNTY PROPERTY

PAGE 1 of 1 8

VALUATION SUMMARY

VALUATION BY		STANDARD
Tax Group: 8	Tax Dist:	
BUILDING MARKET VALUE		668,370
TOTAL MARKET OB/XF VALUE		9,000
TOTAL LAND VALUE - MARKET		250,000
TOTAL MARKET VALUE		927,370
SOH/AGL Deduction		236,397
ASSESSED VALUE		690,973
TOTAL EXEMPTION VALUE	HX HB	50,722
BASE TAXABLE VALUE		640,251
TOTAL JUST VALUE		927,370
NCON VALUE		677,370
INCOME VALUE		
PREVIOUS YEAR MKT VALUE		200,000

PERMIT NUM	DESCRIPTION	AMT	ISSUED
CO240006358	NEW SINGLE FAMILY	470,193	05/29/2024
B230011508	3546T 2496H 716G	470,193	09/11/2023

SALES DATA

OFF RECORD Number	DATE	TYPE INST	Q U	V I	RSN CD	SALE PRICE
2269/0693	4/18/2019	WD	Q	V	01	120,000

GRANTOR: GROGAN SUMMER T
GRANTEE: DRYDEN JO ELLEN CAR

BUILDING NOTES

BUILDING DIMENSIONS

BAS=[YR=2025;ORIG=0,-5] W21 S10 W22 N10 W21 S51 E11 E2 N3 E20 N11 E18 N2 N3 E5 E8 N32 $
FOP=[YR=2025;ORIG=-43,-5] E22 S10 W22 N10 $
FST=[YR=2025;ORIG=-13,27] E5 S3 W5 N3 $
FGR=[YR=2025;ORIG=-31,32] E18 N2 E5 N3 E8 S27 W20 N2 W11 N5 N4 N11 $
FOP=[YR=2025;ORIG=-51,43] E20 S4 W10 S2 W12 N3 E2 N3 $
.

EXTRA FEATURES

LN	OB/XF CODE	DESCRIPTION	BLD	CAP	L	W	UNITS	UT	Adj R	ADJ UNIT PRICE	ORIG COND	YEAR ON	YEAR ACTUAL	Q	% COND	OB/XF MKT VALUE	NOTES
1	0855	CONC PAVER	0	100	0	0	828.00	SF	10.00	10.00	100	2025	2024		100	8,280	
2	0855	CONC PAVER	0	100	0	0	72.00	SF	10.00	10.00	100	2025	2024		100	720	

LAND DESCRIPTION

TOTAL OB/XF 9,000

LN	USE CODE	CLS	LAND USE DESCRIPTION	CAP	RD	LOC ZONE	FRONT	DEPTH	TOT LND UTS	UNIT TYPE	DT	DPTH FACT	% COND	TOT ADJ	UNIT PRICE	ADJ UNIT PRICE	LAND VALUE	OTHER ADJUSTMENTS AND NOTES	YEAR	DENSITY	DECL	FRZ	YR	CONSRV
1	000100	C	RES	100		RSF-1	0.00	0.00	1.00	LT		1.00	1.00	1.00	250,000.00	250,000.00	250,000							

REVIEW DATE 07/03/2024 BY DJ Total Acres: 0.00 Total Land Value: 250,000 Market: 0 Agricultural: 0 Common: 250,000 PRINTED 07/30/2025 BY SYS