LOT 29 IN OR 987/1469
AZALEA POINTE PB 6/164-165

ALTERIO HARRY A & LINDA C
9518 SPRING BLOSSOM COURT
FERNANDINA BEACH, FL 32034-1817

2025

00-00-30-0131-0029-0000

NASSAU COUNTY PROPERTY

BUILDING CHARACTERISTICS

ELEMENT	CD	CONSTRUCTION
Exterior Wall	16	WD FR STUC 100
Roof Structur	03	GABLE/HIP 100
Roof Cover	03	COMP SHNGL 100
Interior Wall	05	DRYWALL 100
Interior Floo	14	CARPET 70
Interior Floo	11	CLAY TILE 30
Air Condition	03	CENTRAL 100
Heating Type	04	AIR DUCTED 100
Bedrooms		3 100
Bathrooms		2.5 100
Frame	02	WOOD FRAME 100
Stories	1.	1. 100
Units		0 100
Occupancy	00	NONE 100
Quality	06	Quality Level 06

DOR CODE 0100 SINGLE FAMILY
MAP NUM | MKT AREA 03
NEIGHBORHOOD/LOC 3030.00

AREA TYPE	TOTAL GROSS AREA	PCT OF BASE	YEAR	TOT ADJ AREA	SUBAREA MARKET VALUE
BAS	2,330	100	2002	2,330	338,158
FGR	468	55	2002	257	37,299
FOP	81	30	2002	24	3,483
FOP	281	30	2002	84	12,191
PTO	6	5	2002	0	0
PTO	119	5	2002	6	870
TOTALS	3,285			2,701	392,002

MARKET ADJUSTMENTS

TYPE	MDL	EFF. AREA	TOT ADJ PTS	EFF. BASE RATE	REPL. COST NEW	AYB	EYB	ECON	FNCT		NORM	% COND
0900	01	2,701	123.5376	163.07	440,452	2002	2002	0	0	0	11.00	89.00

1 SNGL FAM – 100% - 2005 Heated Area: 2330 HX Base Yr 2005

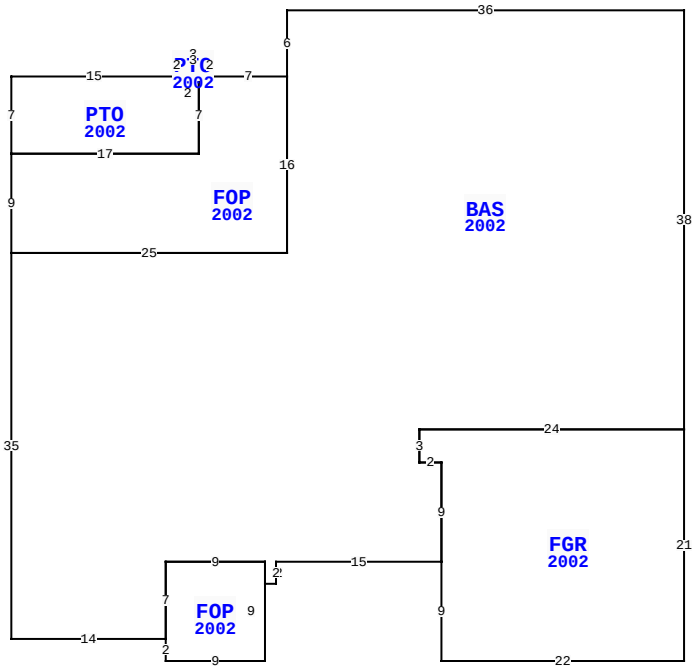

9518 SPRING BLOSSOM CT, FERNANDINA BEACH

BLD DATE		LGL DATE	
XF DATE		LAND DATE	03/12/2024 MLU
INC DATE		AG DATE	

VALUATION SUMMARY

VALUATION BY		STANDARD
Tax Group: 8	Tax Dist:	
BUILDING MARKET VALUE		392,002
TOTAL MARKET OB/XF VALUE		82,093
TOTAL LAND VALUE - MARKET		300,000
TOTAL MARKET VALUE		774,095
SOH/AGL Deduction		389,978
ASSESSED VALUE		384,117
TOTAL EXEMPTION VALUE	HX HB	50,722
BASE TAXABLE VALUE		333,395
TOTAL JUST VALUE		774,095
NCON VALUE		0
INCOME VALUE		
PREVIOUS YEAR MKT VALUE		758,225

PERMIT NUM	DESCRIPTION	AMT	ISSUED
B1632656	SCRNENCL	64,594	07/01/2016
B1530955	SWIM POOL	58,100	08/01/2015
B018613	NEW CONSTR	189,120	07/01/2001

SALES DATA

OFF RECORD Number	DATE	TYPE INST	Q U	V I	RSN CD	SALE PRICE
0987/1469	5/22/2001	WD	Q	V		71,500
GRANTOR: BRYLEN HOMES LTD						
GRANTEE: ALTERIO HARRY A & L						
0946/1681	8/25/2000	WD	U	V	09	104,000
GRANTOR: OCEAN REACH JOINT VEN						
GRANTEE: BRYLEN HOMES LTD						

BUILDING NOTES

BUILDING DIMENSIONS

BAS=[YR=2002] W36 S6 FOP=[YR=2002] W7 PTO=[YR=2002] N2 W3 S2 PTO=[YR=2002] W15 S7 E17 N7 W2$ E3$ W1 S7 W17 S9 E25 N16$ S16 W25 S35 E14 FOP=[YR=2002] S2 E9 N9 W9 S7$ N7 E9 S2 E1 N2 E15 FGR=[YR=2002] S9 E22 N21 W24 S3 E2 S9$ N9 W2 N3 E24 N38$.

EXTRA FEATURES

LN	OB/XF CODE	DESCRIPTION	BLD	CAP	L	W	UNITS	UT	Adj R	ADJ UNIT PRICE	ORIG COND	YEAR ON	YEAR ACTUAL	Q	% COND	OB/XF MKT VALUE	NOTES
1	0500	FP-PRE FAB	0	100	0	0	1.00	UT	3,500.00	3,500.00	100	2002	2002	3	85	2,975	
2	0858	SCULP CONC	0	100	0	0	998.00	SF	13.00	13.00	100	2002	2002	3	94	12,196	
3	0858	SCULP CONC	0	100	0	0	100.00	SF	13.00	13.00	100	2002	2002	3	94	1,222	
4	0911	SCRN RM A	0	100	0	0	1,688.00	SF	17.50	17.50	100	2016	2016	3	70	20,678	
5	0861	POOL GUNIT	0	100	0	0	580.00	SF	85.00	85.00	100	2015	2015	3	75	36,975	
6	0855	CONC PAVER	0	100	0	0	721.00	SF	10.00	10.00	100	2015	2015	3	95	6,850	
7	0855	CONC PAVER	0	100	0	0	126.00	SF	10.00	10.00	100	2015	2015	3	95	1,197	

LAND DESCRIPTION

TOTAL OB/XF 82,093

LN	USE CODE	CLS	LAND USE DESCRIPTION	CAP	RD	LOC ZONE	FRONT	DEPTH	TOT LND UTS	UNIT TYPE	DT	DPTH FACT	% COND	TOT ADJ	UNIT PRICE	ADJ UNIT PRICE	LAND VALUE	OTHER ADJUSTMENTS AND NOTES	YEAR	DENSITY	DECL	FRZ	YR	CONSRV
1	000100	C	RES	100	0003	PUD	0.00	0.00	1.00	LT		1.00	1.00	1.00	300,000.00	300,000.00	300,000							

REVIEW DATE 07/29/2022 BY KBA Total Acres: 0.00 Total Land Value: 300,000 Market: 0 Agricultural: 0 Common: 300,000 PRINTED 07/30/2025 BY SYS