LOT 16
AZALEA POINTE PB 6/164-165

MCKEEL JAMES T & DONNA M
95197 SPRING BLOSSOM LN
FERNANDINA BEACH, FL 32034

2025

00-00-30-0131-0016-0000

BUILDING CHARACTERISTICS

ELEMENT	CD	CONSTRUCTION
Exterior Wall	16	WD FR STUC 100
Roof Structur	03	GABLE/HIP 100
Roof Cover	03	COMP SHNGL 100
Interior Wall	05	DRYWALL 100
Interior Floo	14	CARPET 70
Interior Floo	11	CLAY TILE 30
Air Condition	03	CENTRAL 100
Heating Type	04	AIR DUCTED 100
Bedrooms		3 100
Bathrooms		2.5 100
Frame	02	WOOD FRAME 100
Stories	1.	1. 100
Units		0 100
Occupancy	00	NONE 100
Quality	06	Quality Level 06
DOR CODE	0100	SINGLE FAMILY
MAP NUM		MKT AREA 03
NEIGHBORHOOD/LOC	3030.00	

AREA TYPE	TOTAL GROSS AREA	PCT OF BASE	YEAR	TOT ADJ AREA	SUBAREA MARKET VALUE
BAS	2,462	100	2001	2,462	347,901
FGR	471	55	2001	259	36,599
FOP	81	30	2001	24	3,391
FSP	350	40	2001	140	19,783
PTO	9	5	2001	0	0
PTO	16	5	2001	1	142
TOTALS	3,389			2,886	407,815

MARKET ADJUSTMENTS

TYPE	MDL	EFF. AREA	TOT ADJ PTS	EFF. BASE RATE	REPL. COST NEW	AYB	EYB	ECON	FNCT		NORM	% COND
0900	01	2,886	120.9639	159.67	460,808	2001	2001	0	0	0	11.50	88.50

1 SNGL FAM – 100% - 2020 Heated Area: 2462 HX Base Yr 2020

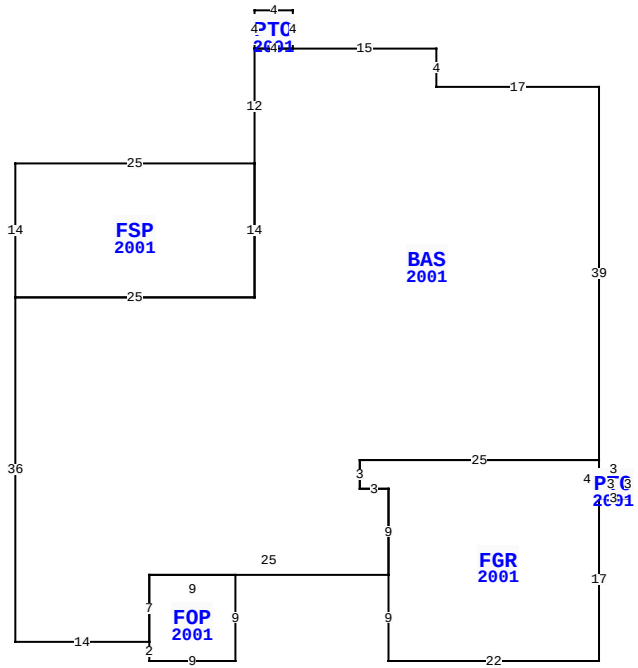

95197 SPRING BLOSSOM LN, FERNANDINA BEACH

BLD DATE		LGL DATE	
XF DATE		LAND DATE	03/12/2024 MLU
INC DATE		AG DATE	

NASSAU COUNTY PROPERTY

PAGE 1 of 1 8

VALUATION SUMMARY

VALUATION BY		STANDARD
Tax Group: 8	Tax Dist:	
BUILDING MARKET VALUE		407,815
TOTAL MARKET OB/XF VALUE		8,024
TOTAL LAND VALUE - MARKET		315,000
TOTAL MARKET VALUE		730,839
SOH/AGL Deduction		334,016
ASSESSED VALUE		396,823
TOTAL EXEMPTION VALUE	HX HB	50,722
BASE TAXABLE VALUE		346,101
TOTAL JUST VALUE		730,839
NCON VALUE		0
INCOME VALUE		
PREVIOUS YEAR MKT VALUE		711,487

PERMIT NUM	DESCRIPTION	AMT	ISSUED
B0108347	NEW CONSTR	185,000	06/01/2001

SALES DATA

OFF RECORD Number	DATE	TYPE INST	Q U	V I	RSN CD	SALE PRICE
2286/0862	7/01/2019	WD	Q	I	01	455,000
GRANTOR: SAMPSON BEVERLY S						
GRANTEE: MCKEEL JAMES T & DO						
2043/1639	5/03/2016	WD	Q	I	01	425,000
GRANTOR: WATTERSON INDIA M ET						
GRANTEE: SAMPSON BEVERLY S						

BUILDING NOTES

BUILDING DIMENSIONS

BAS=[YR=2001] W17 N4 W15 PTO=[YR=2001] N4 W4 S4 E4 $ W4 S12
FSP=[YR=2001] W25 S14 E25 N14 $ S14 W25 S36 E14
FOP=[YR=2001] S2 E9 N9 W9 S7 $ N7 E25 FGR=[YR=2001] S9 E22
N17 PTO=[YR=2001] E3 N3 W3 S3 $ N4 W25 S3 E3 S9 $ N9 W3 N3
E25 N39 $.

EXTRA FEATURES

L N	OB/XF CODE	DESCRIPTION	BLD	CAP	L	W	UNITS	UT	Adj R	ADJ UNIT PRICE	ORIG COND	YEAR ON	YEAR ACTUAL	Q	% COND	OB/XF MKT VALUE	NOTES
1	0500	FP-PRE FAB	0	100	0	0	1.00	UT	3,500.00	3,500.00	100	2001	2001	3	84	2,940	
2	0812	CONCRETE C	0	100	0	0	1,609.00	SF	4.00	4.00	100	2001	2001	3	79	5,084	

LAND DESCRIPTION

TOTAL OB/XF 8,024

L N	USE CODE	CLS	LAND USE DESCRIPTION	CAP	R D	LOC ZONE	FRONT	DEPTH	TOT LND UTS	UNIT TYPE	D T	DPTH FACT	% COND	TOT ADJ	UNIT PRICE	ADJ UNIT PRICE	LAND VALUE	OTHER ADJUSTMENTS AND NOTES	YEAR	DENSITY	DECL	FRZ	YR	CONSRV
1	000100	C	RES	100	0003	PUD	0.00	0.00	1.00	LT		1.00	1.00	1.05	300,000.00	315,000.00	315,000							

REVIEW DATE 07/29/2022 BY KBA Total Acres: 0.00 Total Land Value: 315,000 Market: 0 Agricultural: 0 Common: 315,000 PRINTED 07/30/2025 BY SYS