LOT 15 IN OR 930/528
AZALEA POINTE PB 6/164-165

GRUPE VIRGINIA M
95179 SPRING BLOSSOM LANE
FERNANDINA BEACH, FL 32034

2025

00-00-30-0131-0015-0000

BUILDING CHARACTERISTICS

ELEMENT	CD	CONSTRUCTION
Exterior Wall	16	WD FR STUC 100
Roof Structur	03	GABLE/HIP 100
Roof Cover	03	COMP SHNGL 100
Interior Wall	05	DRYWALL 100
Interior Floo	14	CARPET 60
Interior Floo	11	CLAY TILE 40
Air Condition	03	CENTRAL 100
Heating Type	04	AIR DUCTED 100
Bedrooms		3 100
Bathrooms		3 100
Frame	02	WOOD FRAME 100
Stories	2.	2. 100
Units		0 100
Occupancy	00	NONE 100
Quality	06	Quality Level 06
DOR CODE	0100	SINGLE FAMILY
MAP NUM		MKT AREA 03
NEIGHBORHOOD/LOC	3030.00	

AREA TYPE	TOTAL GROSS AREA	PCT OF BASE	YEAR	TOT ADJ AREA	SUBAREA MARKET VALUE
BAS	2,013	100	2001	2,013	290,296
FGR	590	55	2001	324	46,724
FOP	45	30	2001	14	2,019
FSP	425	40	2001	170	24,516
FST	72	55	2001	40	5,768
FUS	396	100	2001	396	57,107
STP	15	10	2001	2	289
UOP	18	20	2001	4	577
TOTALS	3,574			2,963	427,297

MARKET ADJUSTMENTS

TYPE	MDL	EFF. AREA	TOT ADJ PTS	EFF. BASE RATE	REPL. COST NEW	AYB	EYB	ECON	FNCT		NORM	% COND
0900	01	2,963	123.4502	162.95	482,821	2001	2001	0	0	0	11.50	88.50

1 SNGL FAM – 100% - 2002 Heated Area: 2409 HX Base Yr 2002

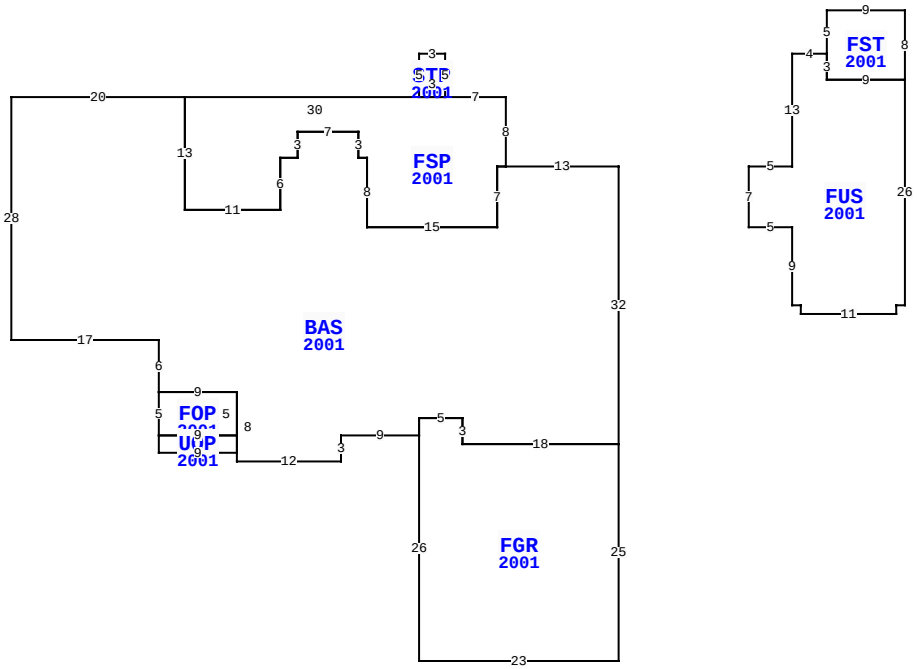

95179 SPRING BLOSSOM LN, FERNANDINA BEACH

BLD DATE		LGL DATE	
XF DATE		LAND DATE	03/12/2024 MLU
INC DATE		AG DATE	

NASSAU COUNTY PROPERTY

PAGE 1 of 1 8

VALUATION SUMMARY

VALUATION BY		STANDARD
Tax Group: 8	Tax Dist:	
BUILDING MARKET VALUE		427,297
TOTAL MARKET OB/XF VALUE		9,805
TOTAL LAND VALUE - MARKET		300,000
TOTAL MARKET VALUE		737,102
SOH/AGL Deduction		396,202
ASSESSED VALUE		340,900
TOTAL EXEMPTION VALUE	HX HB WX	55,722
BASE TAXABLE VALUE		285,178
TOTAL JUST VALUE		737,102
NCON VALUE		0
INCOME VALUE		
PREVIOUS YEAR MKT VALUE		716,850

PERMIT NUM	DESCRIPTION	AMT	ISSUED
B007262	NEW CONSTR	117,000	06/01/2000

SALES DATA

OFF RECORD Number	DATE	TYPE INST	Q U	V I	RSN CD	SALE PRICE
0930/0528	5/01/2000	WD	Q	V		65,000
GRANTOR: BRYLEN HOMES LTD						
GRANTEE: GRUPE JOHN D & VIRG						
0930/0526	5/01/2000	WD	U	V	19	52,000
GRANTOR: OCEAN REACH JOINT VEN						
GRANTEE: BRYLEN HOMES LTD						

BUILDING NOTES

BUILDING DIMENSIONS

BAS=[YR=2001] W13 FSP=[YR=2001] N8 W7 STP=[YR=2001] N5 W3 S5 E3 $ W30 S13 E11 N6 E2 N3 E7 S3 E1 S8 E15 N7 E1 $ W1 S7 W15 N8 W1 N3 W7 S3 W2 S6 W11 N13 W20 S28 E17 S6 FOP=[YR=2001] S5 UOP=[YR=2001] S2 E9 N2 W9 $ E9 N5 W9 $ E9 S8 E12 N3 E9 FGR=[YR=2001] S26 E23 N25 W18 N3 W5 S2 $ N2 E5 S3 E18 N32 $ PTR= E15 FUS=[YR=2001] E5 N13 E4 FST=[YR=2001] N5 E9 S8 W9 N3 $ S3 E9 S26 W1 S1 W11 N1 W1 N9 W5 N7 $ W15 $.

EXTRA FEATURES

LN	OB/XF CODE	DESCRIPTION	BLD	CAP	L	W	UNITS	UT	Adj R	ADJ UNIT PRICE	ORIG COND	YEAR ON	YEAR ACTUAL	Q	% COND	OB/XF MKT VALUE	NOTES
1	0500	FP-PRE FAB	0	100	0	0	1.00	UT	3,500.00	3,500.00	100	2001	2001	3	84	2,940	
2	0812	CONCRETE C	0	100	0	0	1,273.00	SF	4.00	4.00	100	2001	2001	3	79	4,023	
3	0810	CONCRETE A	0	100	7	4	28.00	SF	6.50	6.50	100	2001	2001	3	79	144	
4	0855	CONC PAVER	0	100	0	0	419.00	SF	7.00	7.00	100	2012	2012	3	92	2,698	

LAND DESCRIPTION

TOTAL OB/XF 9,805

LN	USE CODE	CLS	LAND USE DESCRIPTION	CAP	RD	LOC ZONE	FRONT	DEPTH	TOT LND UTS	UNIT TYPE	DT	DPTH FACT	% COND	TOT ADJ	UNIT PRICE	ADJ UNIT PRICE	LAND VALUE	OTHER ADJUSTMENTS AND NOTES	YEAR	DENSITY	DECL	FRZ	YR	CONSRV
1	000100	C	RES	100	0003	PUD	0.00	0.00	1.00	LT		1.00	1.00	1.00	300,000.00	300,000.00	300,000							

REVIEW DATE 07/29/2022 BY KBA Total Acres: 0.00 Total Land Value: 300,000 Market: 0 Agricultural: 0 Common: 300,000 PRINTED 07/30/2025 BY SYS