LOT 14
AZALEA POINTE PB 6/164-165

SMITH FAMILY TRUST/SMITH JAMES EVERETT TRUSTEE
95159 SPRING BLOSSOM LANE
FERNANDINA BEACH, FL 32034

2025

00-00-30-0131-0014-0000

BUILDING CHARACTERISTICS

ELEMENT	CD	CONSTRUCTION
Exterior Wall	16	WD FR STUC 100
Roof Structur	03	GABLE/HIP 100
Roof Cover	03	COMP SHNGL 100
Interior Wall	05	DRYWALL 100
Interior Floo	11	CLAY TILE 60
Interior Floo	14	CARPET 40
Air Condition	03	CENTRAL 100
Heating Type	04	AIR DUCTED 100
Bedrooms		4 100
Bathrooms		4 100
Frame	02	WOOD FRAME 100
Stories	1.5	1.5 100
Units		0 100
Occupancy	00	NONE 100
Quality	06	Quality Level 06

DOR CODE 0100 SINGLE FAMILY
MAP NUM | MKT AREA 03
NEIGHBORHOOD/LOC 3030.00

AREA TYPE	TOTAL GROSS AREA	PCT OF BASE	YEAR	TOT ADJ AREA	SUBAREA MARKET VALUE
BAS	2,941	100	2002	2,941	417,673
FGR	587	55	2002	323	45,871
FOP	143	30	2002	43	6,107
FOP	233	30	2002	70	9,941
FUS	371	100	2002	371	52,688
TOTALS	4,275			3,748	532,281

MARKET ADJUSTMENTS

TYPE	MDL	EFF. AREA	TOT ADJ PTS	EFF. BASE RATE	REPL. COST NEW	AYB	EYB	ECON	FNCT		NORM	% COND
0900	01	3,748	120.8880	159.57	598,068	2002	2002	0	0	0	11.00	89.00

1 SNGL FAM – 100% - 2021 Heated Area: 3312 HX Base Yr 2021

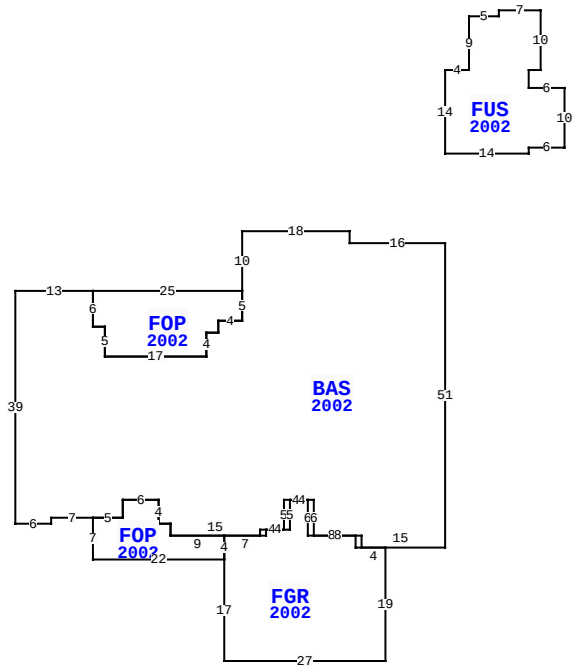

95159 SPRING BLOSSOM LN, FERNANDINA BEACH

BLD DATE		LGL DATE	
XF DATE		LAND DATE	03/12/2024 MLU
INC DATE		AG DATE	

NASSAU COUNTY PROPERTY

PAGE 1 of 1 8

VALUATION SUMMARY

VALUATION BY		STANDARD
Tax Group: 8	Tax Dist:	
BUILDING MARKET VALUE		532,281
TOTAL MARKET OB/XF VALUE		18,769
TOTAL LAND VALUE - MARKET		300,000
TOTAL MARKET VALUE		851,050
SOH/AGL Deduction		179,472
ASSESSED VALUE		671,578
TOTAL EXEMPTION VALUE	HX HB	50,722
BASE TAXABLE VALUE		620,856
TOTAL JUST VALUE		851,050
NCON VALUE		0
INCOME VALUE		
PREVIOUS YEAR MKT VALUE		826,333

PERMIT NUM	DESCRIPTION	AMT	ISSUED
20200964	ADDITION	0	11/01/2021
B018510	NEW CONSTR	259,500	07/01/2001

SALES DATA

OFF RECORD Number	DATE	TYPE INST	Q U	V I	RSN CD	SALE PRICE
2325/0457	12/12/2019	WD	Q	I	01	559,000
GRANTOR: MCCAFFREY MAURICE E &						
GRANTEE: SMITH FAMILY TRUST						
0986/0210	5/14/2001	WD	Q	V		66,000
GRANTOR: BRYLEN HOMES LTD						
GRANTEE: MCCAFFREY MAURICE E						

BUILDING NOTES

BUILDING DIMENSIONS

BAS=[YR=2002] W16 N2 W18 S10 FOP=[YR=2002] W25 S6 E2 S5 E17 N4 E2 N2 E4 N5$ S5 W4S2 W2 S4 W17 N5 W2 N6 W13 S39 E6 N1 E7 FOP=[YR=2002] S7 E22 FGR=[YR=2002] S17 E27 N19 W4 N2 W8 N6 W4 S5 W4 S1 W7 S4$ N4 W9 N2 W2 N4 W6 S3 W5$ E5 N3 E6 S4 E2 S2 E15 N1 E4 N5 E4 S6 E8 S2 E15 N51$ PTR=N15 FUS=[YR=2002] N14 E4 N9 E5 N1 E7 S10 W2 S3 E6 S10 W6 S1 W14$ S15$.

EXTRA FEATURES

LN	OB/XF CODE	DESCRIPTION	BLD	CAP	L	W	UNITS	UT	Adj R	ADJ UNIT PRICE	ORIG COND	YEAR ON	YEAR ACTUAL	Q	% COND	OB/XF MKT VALUE	NOTES
1	0500	FP-PRE FAB	0	100	0	0	1.00	UT	3,500.00	3,500.00	100	2002	2002	3	85	2,975	
2	0812	CONCRETE C	0	100	0	0	1,130.00	SF	4.00	4.00	100	2002	2002	3	80	3,616	
3	0810	CONCRETE A	0	100	0	0	200.00	SF	6.50	6.50	100	2002	2002	3	80	1,040	
4	0861	POOL GUNIT	0	100	0	0	172.00	SF	85.00	85.00	100	2002	2002	3	27	3,947	
5	0845	KOOL DECK	0	100	0	0	238.00	SF	7.25	7.25	100	2002	2002	3	80	1,380	
6	0810	CONCRETE A	0	100	4	3	12.00	SF	6.50	6.50	100	2002	2002	3	80	62	
7	0911	SCRN RM A	0	100	0	0	365.00	SF	17.50	17.50	100	2021	2021	3	90	5,749	

LAND DESCRIPTION

TOTAL OB/XF 18,769

LN	USE CODE	CLS	LAND USE DESCRIPTION	CAP	RD	LOC ZONE	FRONT	DEPTH	TOT LND UTS	UNIT TYPE	DT	DPTH FACT	% COND	TOT ADJ	UNIT PRICE	ADJ UNIT PRICE	LAND VALUE	OTHER ADJUSTMENTS AND NOTES	YEAR	DENSITY	DECL	FRZ	YR	CONSRV
1	000100	C	RES	100	0003	PUD	0.00	0.00	1.00	LT		1.00	1.00	1.00	300,000.00	300,000.00	300,000							

REVIEW DATE 11/29/2021 BY DJ Total Acres: 0.00 Total Land Value: 300,000 Market: 0 Agricultural: 0 Common: 300,000 PRINTED 07/30/2025 BY SYS