LOT 10
AZALEA POINTE PB 6/164-165

LOGAN JULIE
34 HICKORY RIDGE LN
WHEELERSBURG, OH 45694

2025

00-00-30-0131-0010-0000

BUILDING CHARACTERISTICS

ELEMENT	CD	CONSTRUCTION
Exterior Wall	16	WD FR STUC 100
Roof Structur	03	GABLE/HIP 100
Roof Cover	03	COMP SHNGL 100
Interior Wall	05	DRYWALL 100
Interior Floo	11	CLAY TILE 50
Interior Floo	14	CARPET 50
Air Condition	03	CENTRAL 100
Heating Type	04	AIR DUCTED 100
Bedrooms		4 100
Bathrooms		3 100
Frame	02	WOOD FRAME 100
Stories	2.	2. 100
Units		0 100
Occupancy	00	NONE 100
Quality	06	Quality Level 06
DOR CODE	0100	SINGLE FAMILY
MAP NUM		MKT AREA 03
NEIGHBORHOOD/LOC	3030.00	

AREA TYPE	TOTAL GROSS AREA	PCT OF BASE	YEAR	TOT ADJ AREA	SUBAREA MARKET VALUE
BAS	2,406	100	2002	2,406	342,421
FGR	516	55	2002	284	40,418
FOP	81	30	2002	24	3,416
FOP	184	30	2002	55	7,828
FUS	311	100	2002	311	44,261
STP	12	10	2002	1	142
TOTALS	3,510			3,081	438,488

MARKET ADJUSTMENTS

TYPE	MDL	EFF. AREA	TOT ADJ PTS	EFF. BASE RATE	REPL. COST NEW	AYB	EYB	ECON	FNCT		NORM	% COND
0900	01	3,081	121.1410	159.91	492,683	2002	2002	0	0	0	11.00	89.00

1 SNGL FAM – 0% - 0 Heated Area: 2717 HX Base Yr

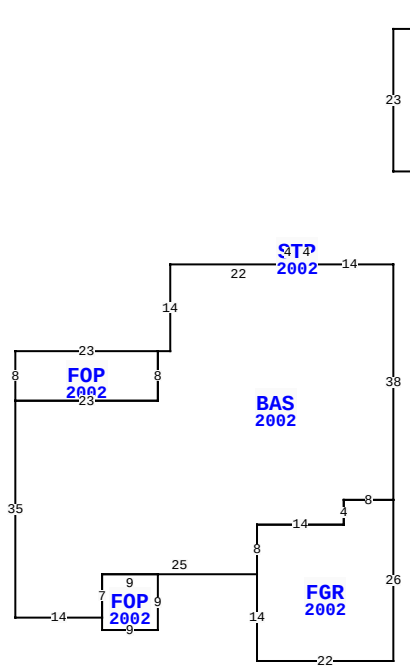

9574 HILDRETH LN, FERNANDINA BEACH

BLD DATE		LGL DATE	
XF DATE		LAND DATE	03/12/2024 MLU
INC DATE		AG DATE	

NASSAU COUNTY PROPERTY

PAGE 1 of 1 8

VALUATION SUMMARY

VALUATION BY	STANDARD
Tax Group: 8	Tax Dist:
BUILDING MARKET VALUE	438,488
TOTAL MARKET OB/XF VALUE	33,978
TOTAL LAND VALUE - MARKET	300,000
TOTAL MARKET VALUE	772,466
SOH/AGL Deduction	0
ASSESSED VALUE	772,466
TOTAL EXEMPTION VALUE	0
BASE TAXABLE VALUE	772,466
TOTAL JUST VALUE	772,466
NCON VALUE	0
INCOME VALUE	
PREVIOUS YEAR MKT VALUE	753,383

PERMIT NUM	DESCRIPTION	AMT	ISSUED
B1429656	SCRNENCL	11,000	12/01/2014
B0108687	NEW CONSTR	204,960	08/01/2001

SALES DATA

OFF RECORD Number	DATE	TYPE INST	Q / U	V / I	RSN CD	SALE PRICE
2364/1132	5/28/2020	WD	U	I	11	100
GRANTOR: LOGAN-AMELIA ISLAND L						
GRANTEE: LOGAN JULIE						
1908/0707	2/27/2014	QC	U	I	11	100
GRANTOR: LOGAN JULIE A TRUSTEE						
GRANTEE: LOGAN-AMELIA ISLAND						

BUILDING NOTES

BUILDING DIMENSIONS

BAS=[YR=2002] W14 STP=[YR=2002] N4 W3 S4 E3$ W22 S14 W2 FOP=[YR=2002] W23 S8 E23 N8$ S8 W23 S35 E14 FOP=[YR=2002] S2 E9 N9 W9 S7$ N7 E25 FGR=[YR=2002] S14 E22 N26 W8 S4 W14 S8$ N8 E14 N4 E8 N38$ PTR=N15 FUS=[YR=2002] N23 E9 N3 E4 S26 W13$ S15$.

EXTRA FEATURES

LN	OB/XF CODE	DESCRIPTION	BLD	CAP	L	W	UNITS	UT	Adj R	ADJ UNIT PRICE	ORIG COND	YEAR ON	YEAR ACTUAL	Q	% COND	OB/XF MKT VALUE	NOTES
1	0500	FP-PRE FAB	0	0	0	0	1.00	UT	3,500.00	3,500.00	100	2002	2002	3	85	2,975	
2	0812	CONCRETE C	0	0	0	0	2,106.00	SF	4.00	4.00	100	2002	2002	3	80	6,739	
3	0810	CONCRETE A	0	0	0	0	90.00	SF	6.50	6.50	100	2002	2002	3	80	468	
4	0861	POOL GUNIT	0	0	0	0	459.00	SF	85.00	85.00	100	2002	2002	3	27	10,534	
5	0845	KOOL DECK	0	0	0	0	592.00	SF	7.25	7.25	100	2002	2002	3	80	3,434	
6	0911	SCRN RM A	0	0	0	0	864.00	SF	17.50	17.50	100	2015	2015	3	65	9,828	

LAND DESCRIPTION

TOTAL OB/XF 33,978

LN	USE CODE	CLS	LAND USE DESCRIPTION	CAP	RD	LOC ZONE	FRONT	DEPTH	TOT LND UTS	UNIT TYPE	DT	DPTH FACT	% COND	TOT ADJ	UNIT PRICE	ADJ UNIT PRICE	LAND VALUE	OTHER ADJUSTMENTS AND NOTES	YEAR	DENSITY	DECL	FRZ	YR	CONSRV
1	000100	C	RES	0	0003	PUD	0.00	0.00	1.00	LT		1.00	1.00	1.00	300,000.00	300,000.00	300,000							

REVIEW DATE 04/13/2020 BY DJA Total Acres: 0.00 Total Land Value: 300,000 Market: 0 Agricultural: 0 Common: 300,000 PRINTED 07/30/2025 BY SYS