BLOCK 14 LOTS 1 & 2 &
PT ABND R/W RES #97-231
AMERICAN BEACH SUB 2 PB 3/6

COZETTA'S BEACH HOUSE LLC
1860 SHOAL CREEK BLVD
DECATUR, GA 29646

2025

00-00-30-010B-0014-0010

BUILDING CHARACTERISTICS

ELEMENT	CD	CONSTRUCTION
Exterior Wall	10	ABOVE AVG 100
Roof Structur	03	GABLE/HIP 100
Roof Cover	03	COMP SHNGL 100
Interior Wall	05	DRYWALL 100
Interior Floo	11	CLAY TILE 60
Interior Floo	14	CARPET 40
Air Condition	03	CENTRAL 100
Heating Type	04	AIR DUCTED 100
Bedrooms		4 100
Bathrooms		3 100
Frame	02	WOOD FRAME 100
Stories	2.	2. 100
Units		0 100
Occupancy	00	NONE 100
Quality	02	Quality Level 02
DOR CODE	0100	SINGLE FAMILY
MAP NUM		MKT AREA 03
NEIGHBORHOOD/LOC	3038.00	

AREA TYPE	TOTAL GROSS AREA	PCT OF BASE	YEAR	TOT ADJ AREA	SUBAREA MARKET VALUE
BAS	1,337	100	2018	1,337	191,912
FGR	273	55	2018	150	21,531
FOP	84	30	2018	25	3,589
FOP	168	30	2018	50	7,177
FUS	506	100	2018	506	72,631
PTO	48	5	2018	2	287
PTO	65	5	2018	3	431
STR	33	10	2018	3	431
TOTALS	2,514			2,076	297,988

MARKET ADJUSTMENTS

TYPE	MDL	EFF. AREA	TOT ADJ PTS	EFF. BASE RATE	REPL. COST NEW	AYB	EYB	ECON	FNCT		NORM	% COND
0900	01	2,076	111.5338	147.22	305,629	2018	2018	0	0	0	2.50	97.50

1 SNGL FAM – 0% - 0 Heated Area: 1843 HX Base Yr

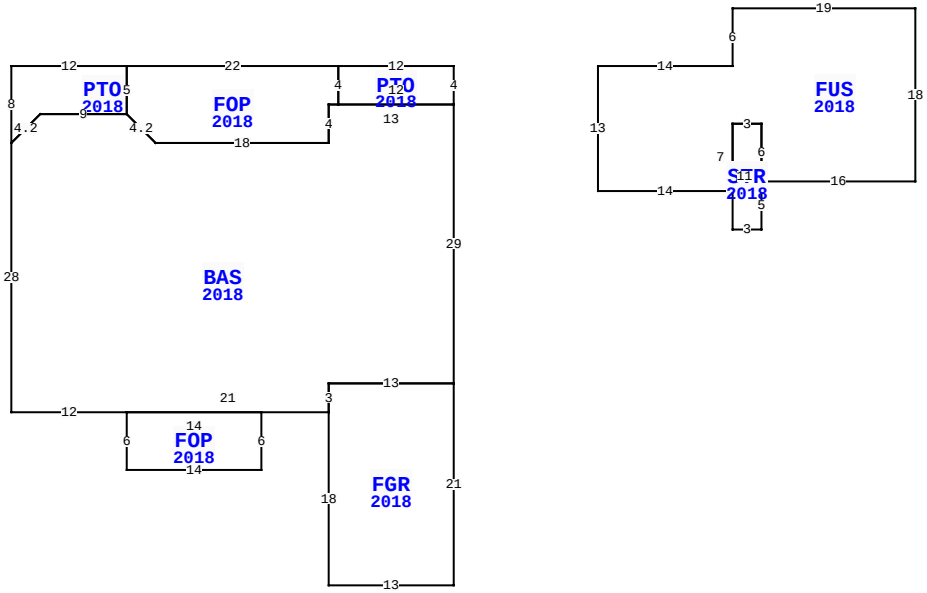

5407 ERVIN ST, FERNANDINA BEACH

BLD DATE	03/03/2023 NW	LGL DATE	
XF DATE		LAND DATE	04/15/2024 MLU
INC DATE		AG DATE	

NASSAU COUNTY PROPERTY

PAGE 1 of 1 8

VALUATION SUMMARY

VALUATION BY	STANDARD
Tax Group: 8	Tax Dist:
BUILDING MARKET VALUE	297,988
TOTAL MARKET OB/XF VALUE	68,748
TOTAL LAND VALUE - MARKET	750,000
TOTAL MARKET VALUE	1,116,736
SOH/AGL Deduction	485,828
ASSESSED VALUE	630,908
TOTAL EXEMPTION VALUE	0
BASE TAXABLE VALUE	630,908
TOTAL JUST VALUE	1,116,736
NCON VALUE	0
INCOME VALUE	
PREVIOUS YEAR MKT VALUE	1,104,410

PERMIT NUM	DESCRIPTION	AMT	ISSUED
A016789	XFOB	15,570	11/09/2022
21016473	SWIM POOL	89,066	11/29/2021
B1706077	NEW CONSTR	228,364	07/07/2017

SALES DATA

OFF RECORD Number	DATE	TYPE INST	Q / U	V / I	RSN CD	SALE PRICE
2271/1969	5/02/2019	QC	U	I	11	100
GRANTOR: CAIN CHRISTINE C & AN						
GRANTEE: COZETTA'S BEACH HOU						
2014/0185	11/16/2015	QC	U	V	11	100
GRANTOR: WILLIAMS COZETTA L &						
GRANTEE: CAIN CHRISTINE C &						

BUILDING NOTES

BUILDING DIMENSIONS

PTO=[YR=2018] W12 FOP=[YR=2018] W22 PTO=[YR=2018] W12 S8
BAS=[YR=2018] S28 E12 FOP=[YR=2018] S6 E14 N6 W14$ E21
FGR=[YR=2018] S18 E13 N21 W13 S3$ N3 E13 N29 W13 S4 W18 U3
L3 W9 D3 L3 $ U3 R3 E9 N5$ S5 D3 R3 E18 N4 E1 N4$ S4
E12 N4$ PTR= E15 FUS=[YR=2018] E14 N6 E19 S18 W16
STR=[YR=2018] S5 W3 N11 E3 S6$ N6 W3 S7 W14 N13$ W15$.

EXTRA FEATURES

LN	OB/XF CODE	DESCRIPTION	BLD	CAP	L	W	UNITS	UT	Adj R	ADJ UNIT PRICE	ORIG COND	YEAR ON	YEAR ACTUAL	Q	% COND	OB/XF MKT VALUE	NOTES
1	0810	CONCRETE A	0	0	0	0	288.00	SF	6.50	6.50	100	2018	2018	3	97	1,816	
2	0911	SCRN RM A	0	0	0	0	1,260.00	SF	17.50	17.50	100	2022	2022	3	93	20,507	
3	0861	POOL GUNIT	0	0	0	0	348.00	SF	85.00	85.00	100	2022	2022	3	95	28,101	
4	0855	CONC PAVER	0	0	0	0	480.00	SF	10.00	10.00	100	2022	2022	3	99	4,752	
5	0871	POOL HTR R	0	0	0	0	1.00	UT	2,000.00	2,000.00	100	2022	2022	3	93	1,860	
6	0811	CONCRETE B	0	0	0	0	2,275.00	SF	5.20	5.20	100	2024	2022		99	11,712	

LAND DESCRIPTION

TOTAL OB/XF 68,748

LN	USE CODE	CLS	LAND USE DESCRIPTION	CAP	RD	LOC ZONE	FRONT	DEPTH	TOT LND UTS	UNIT TYPE	DT	DPTH FACT	% COND	TOT ADJ	UNIT PRICE	ADJ UNIT PRICE	LAND VALUE	OTHER ADJUSTMENTS AND NOTES	YEAR	DENSITY	DECL	FRZ	YR	CONSRV
1	000100	C	RES	0		RSF-	2100.00	100.00	100.00	FF		1.00	1.00	1.00	7,500.00	7,500.00	750,000							

REVIEW DATE 01/24/2024 BY NW Total Acres: 0.00 Total Land Value: 750,000 Market: 0 Agricultural: 0 Common: 750,000 PRINTED 07/30/2025 BY SYS