BLOCK 9 LOT 73
AMERICAN BEACH SUB #1 PB 2/42

WILLIS FAMILY TRUST/WILLIS FLOYD B TRUSTEE
3949 CHARTER HOUSE DR
JACKSONVILLE, FL 32224

2025

00-00-30-010A-0009-0730

NASSAU COUNTY PROPERTY

BUILDING CHARACTERISTICS

ELEMENT	CD	CONSTRUCTION
Exterior Wall	05	AVERAGE 100
Roof Structur	03	GABLE/HIP 100
Roof Cover	03	COMP SHNGL 100
Interior Wall	05	DRYWALL 100
Interior Floo	11	CLAY TILE 60
Interior Floo	14	CARPET 40
Air Condition	03	CENTRAL 100
Heating Type	04	AIR DUCTED 100
Bedrooms		2 100
Bathrooms		1.5 100
Frame	02	WOOD FRAME 100
Stories	2.	2. 100
Units		0 100
Occupancy	00	NONE 100
Quality	03	Quality Level 03

DOR CODE 0100 SINGLE FAMILY
MAP NUM | MKT AREA 03
NEIGHBORHOOD/LOC 3038.00

AREA TYPE	TOTAL GROSS AREA	PCT OF BASE	YEAR	TOT ADJ AREA	SUBAREA MARKET VALUE
BAS	554	100	2001	554	59,832
FOP	16	30	2001	5	540
FSP	187	40	2001	75	8,100
FUS	510	100	2001	510	55,080
PTO	25	5	2001	1	108
UAT	300	10	2001	30	3,240
TOTALS	1,592			1,175	126,900

MARKET ADJUSTMENTS

TYPE	MDL	EFF. AREA	TOT ADJ PTS	EFF. BASE RATE	REPL. COST NEW	AYB	EYB	ECON	FNCT		NORM	% COND
0100	01	1,175	121.6880	121.69	142,986	2001	2001	0	0	0	11.25	88.75

1 SINGLE FAM – 0% - 0 Heated Area: 1064 HX Base Yr

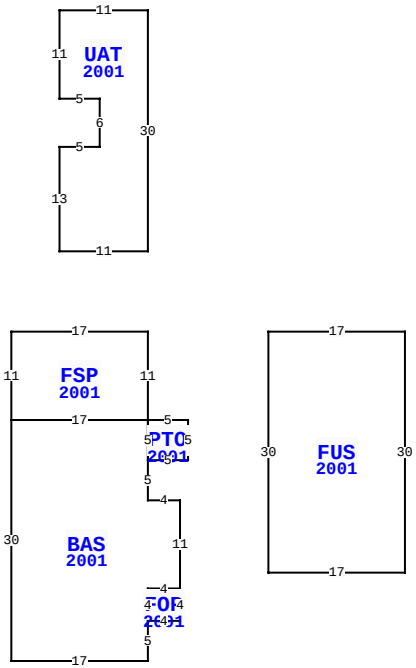

5442 PRICE ST, FERNANDINA BEACH

BLD DATE		LGL DATE	
XF DATE		LAND DATE	04/15/2024 MLU
INC DATE		AG DATE	

VALUATION SUMMARY

VALUATION BY	STANDARD
Tax Group: 8	Tax Dist:
BUILDING MARKET VALUE	126,900
TOTAL MARKET OB/XF VALUE	3,574
TOTAL LAND VALUE - MARKET	375,000
TOTAL MARKET VALUE	505,474
SOH/AGL Deduction	248,668
ASSESSED VALUE	256,806
TOTAL EXEMPTION VALUE	0
BASE TAXABLE VALUE	256,806
TOTAL JUST VALUE	505,474
NCON VALUE	0
INCOME VALUE	
PREVIOUS YEAR MKT VALUE	499,866

PERMIT NUM	DESCRIPTION	AMT	ISSUED
B0108463	NEW CONSTR	106,000	06/01/2001

SALES DATA

OFF RECORD Number	DATE	TYPE INST	Q U	V I	RSN CD	SALE PRICE
2504/1869	3/06/2021	WD	U	I	11	100
GRANTOR: WILLIS FLOYD B & WAND						
GRANTEE: WILLIS FAMILY TRUST						
0771/1717	9/24/1996	WD	Q	V		16,000
GRANTOR: LEWIS VIVIAN S						
GRANTEE: WILLIS FLOYD B & WA						

BUILDING NOTES

BUILDING DIMENSIONS

FSP=[YR=2001] W17 S11 BAS=[YR=2001] S30 E17 N5 FOP=[YR=2001] E4 N4 W4 S4 $ N4 E4 N11 W4 N5 PTO=[YR=2001] E5 N5 W5 S5 $ N5 W17 $ E17 N11 $ PTR= E15 FUS=[YR=2001] E17 S30 W17 N30 $ W15 $ PTR= N10 UAT=[YR=2001] N30 W11 S11 E5 S6 W5 S13 E11 $ S10 $.

EXTRA FEATURES

LN	OB/XF CODE	DESCRIPTION	BLD	CAP	L	W	UNITS	UT	Adj R	ADJ UNIT PRICE	ORIG COND	YEAR ON	YEAR ACTUAL	Q	% COND	OB/XF MKT VALUE	NOTES
1	0811	CONCRETE B	0	0	0	0	458.00	SF	5.20	5.20	100	2001	2001	3	79	1,881	
2	0810	CONCRETE A	0	0	8	4	32.00	SF	6.50	6.50	100	2001	2001	3	79	164	
3	0855	CONC PAVER	0	0	0	0	273.00	SF	7.00	7.00	100	2002	2002	3	80	1,529	

LAND DESCRIPTION

TOTAL OB/XF 3,574

LN	USE CODE	CLS	LAND USE DESCRIPTION	CAP	RD	LOC ZONE	FRONT	DEPTH	TOT LND UTS	UNIT TYPE	DT	DPTH FACT	% COND	TOT ADJ	UNIT PRICE	ADJ UNIT PRICE	LAND VALUE	OTHER ADJUSTMENTS AND NOTES	YEAR	DENSITY	DECL	FRZ	YR	CONSRV
1	000100	C	RES	0		RSF-2	50.00	100.00	50.00	FF		1.00	1.00	1.00	7,500.00	7,500.00	375,000							

REVIEW DATE 04/17/2020 BY DJA Total Acres: 0.00 Total Land Value: 375,000 Market: 0 Agricultural: 0 Common: 375,000 PRINTED 07/30/2025 BY SYS