BLOCK 2 LOTS 15 & 16
IN OR 2271/1246 & OR 2271/1256
AMERICAN BEACH SUB 1 PB 2/42

MORELL RIET M REVOCABLE TRUST/MORRELL RIET MATTHIA
5484 GREGG ST
FERNANDINA BEACH, FL 32034

2025

00-00-30-010A-0002-0150

BUILDING CHARACTERISTICS

ELEMENT	CD	CONSTRUCTION
Exterior Wall	16	WD FR STUC 50
Exterior Wall	17	CB STUCCO 50
Roof Structur	04	WOOD TRUSS 100
Roof Cover	03	COMP SHNGL 100
Interior Wall	05	DRYWALL 100
Interior Floo	11	CLAY TILE 50
Interior Floo	12	HARDWOOD 50
Air Condition	03	CENTRAL 100
Heating Type	04	AIR DUCTED 100
Bedrooms		3 100
Bathrooms		2 100
Frame	04	REIN CONC 100
Stories	2.	2. 100
Units		0 100
Quality	06	Quality Level 06
DOR CODE	0100	SINGLE FAMILY
MAP NUM		MKT AREA 03
NEIGHBORHOOD/LOC	3038.00	

AREA TYPE	TOTAL GROSS AREA	PCT OF BASE	YEAR	TOT ADJ AREA	SUBAREA MARKET VALUE
BAS	435	100	2021	435	94,500
FGR	322	55	2021	177	38,451
FGR	828	55	2021	455	98,845
FOP	473	30	2021	142	30,848
FOP	705	30	2021	212	46,056
FST	40	55	2021	22	4,779
FUS	2,605	100	2021	2,605	565,915
TOTALS	5,408			4,048	879,394

MARKET ADJUSTMENTS

TYPE	MDL	EFF. AREA	TOT ADJ PTS	EFF. BASE RATE	REPL. COST NEW	AYB	EYB	ECON	FNCT		NORM	% COND
0500	11	4,048	139.5900	220.55	892,786	2021	2021	0	0	0	1.50	98.50

1 SFR CUST – 100% - 2023 Heated Area: 3040 HX Base Yr 2023

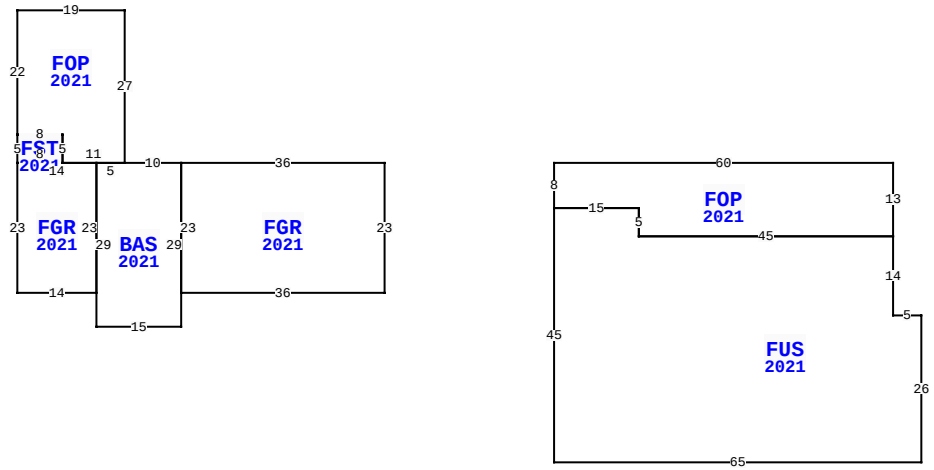

5484 GREGG ST, FERNANDINA BEACH

BLD DATE		LGL DATE	
XF DATE		LAND DATE	03/12/2024 MLU
INC DATE		AG DATE	

NASSAU COUNTY PROPERTY

PAGE 1 of 1 8

VALUATION SUMMARY

VALUATION BY		STANDARD
Tax Group: 8	Tax Dist:	
BUILDING MARKET VALUE		879,394
TOTAL MARKET OB/XF VALUE		27,139
TOTAL LAND VALUE - MARKET		1,440,000
TOTAL MARKET VALUE		2,346,533
SOH/AGL Deduction		620,522
ASSESSED VALUE		1,726,011
TOTAL EXEMPTION VALUE	HX HB	50,722
BASE TAXABLE VALUE		1,675,289
TOTAL JUST VALUE		2,346,533
NCON VALUE		0
INCOME VALUE		
PREVIOUS YEAR MKT VALUE		2,306,233

PERMIT NUM	DESCRIPTION	AMT	ISSUED
20206958	CO ISSUED	0	10/14/2021
20206958	NEW CONSTR	0	03/10/2020

SALES DATA

OFF RECORD Number	DATE	TYPE INST	Q / U	V / I	RSN CD	SALE PRICE
2271/1256	4/30/2019	WD	Q	V	03	415,000
GRANTOR: BERNARD RUTHENE HUGHE						
GRANTEE: MORELL RIET MATTHIA						
2271/1246	4/30/2019	WD	Q	V	03	415,000
GRANTOR: BERNARD RUTHENE HUGHE						
GRANTEE: MATTHIAS RIET REVOC						

BUILDING NOTES

BUILDING DIMENSIONS

FGR=[YR=2021] W36 BAS=[YR=2021] W10 FOP=[YR=2021] N27 W19 S22 FST=[YR=2021] S5 FGR=[YR=2021] S23 E14 N23 W14 $ E8 N5 W8 $ E8 S5 E11 $ W5 S29 E15 N29 $ S23 E36 N23$ PTR= E30 FOP=[YR=2021] E60 S13 FUS=[YR=2021] S14 E5 S26 W65 N45 E15 S5 E45$ W45 N5 W15 N8 $ W30 $.

EXTRA FEATURES

LN	OB/XF CODE	DESCRIPTION	BLD	CAP	L	W	UNITS	UT	Adj R	ADJ UNIT PRICE	ORIG COND	YEAR ON	YEAR ACTUAL	Q	% COND	OB/XF MKT VALUE	NOTES
1	0409	ELEVATOR R	0	100	0	0	1.00	UT	10,200.00	10,200.00	100	2021	2021	3	100	10,200	
2	0855	CONC PAVER	0	100	0	0	1,711.00	SF	10.00	10.00	100	2021	2021	3	99	16,939	

LAND DESCRIPTION

TOTAL OB/XF 27,139

LN	USE CODE	CLS	LAND USE DESCRIPTION	CAP	RD	LOC ZONE	FRONT	DEPTH	TOT LND UTS	UNIT TYPE	DT	DPTH FACT	% COND	TOT ADJ	UNIT PRICE	ADJ UNIT PRICE	LAND VALUE	OTHER ADJUSTMENTS AND NOTES	YEAR	DENSITY	DECL	FRZ	YR	CONSRV
1	000120	C	RES OCEAN	100		RSF-	2100.00	150.00	100.00	FF		1.00	1.00	0.80	18,000.00	14,400.00	1,440,000							

REVIEW DATE 11/29/2021 BY RK Total Acres: 0.00 Total Land Value: 1,440,000 Market: 0 Agricultural: 0 Common: 1,440,000 PRINTED 07/30/2025 BY SYS