IN OR 616 PG 105

KEELING ROBERT D JR & JANE L
86115 JOHN GOODBREAD LANE
YULEE, FL 32097

2024

53-3N-27-0000-0004-0020

NASSAU COUNTY PROPERTY

BUILDING CHARACTERISTICS

ELEMENT	CD	CONSTRUCTION
Exterior Wall	05	AVERAGE 70
Exterior Wall	20	FACE BRICK 30
Roof Structur	03	GABLE/HIP 100
Roof Cover	03	COMP SHNGL 100
Interior Wall	05	DRYWALL 100
Interior Floo	14	CARPET 80
Interior Floo	08	SHT VINYL 20
Air Condition	03	CENTRAL 100
Heating Type	04	AIR DUCTED 100
Bedrooms		4 100
Bathrooms		3 100
Frame	02	WOOD FRAME 100
Stories	2.	2. 100
Units		0 100
Occupancy	00	NONE 100
Quality	03	Quality Level 03
DOR CODE	0100	SINGLE FAMILY
MAP NUM		MKT AREA 04
NEIGHBORHOOD/LOC	4053.00	

AREA TYPE	TOTAL GROSS AREA	PCT OF BASE	TOT ADJ AREA	SUBAREA MARKET VALUE
BAS	1,556	100	1,556	127,095
FEP	180	80	144	11,762
FGR	400	55	220	17,969
FOP	144	30	43	3,512
FUS	448	100	448	36,593
PTO	959	5	48	3,920
TOTALS	3,687		2,459	200,853

MARKET ADJUSTMENTS

TYPE	MDL	EFF. AREA	TOT ADJ PTS	EFF. BASE RATE	REPL. COST NEW	AYB	EYB	ECON	FNCT		NORM	% COND
0100	01	2,459	104.5440	99.32	244,228	1991	1991	0	0	0	17.76	82.24

1 SINGLE FAM – 100% - 0 Heated Area: 2004 HX Base Yr

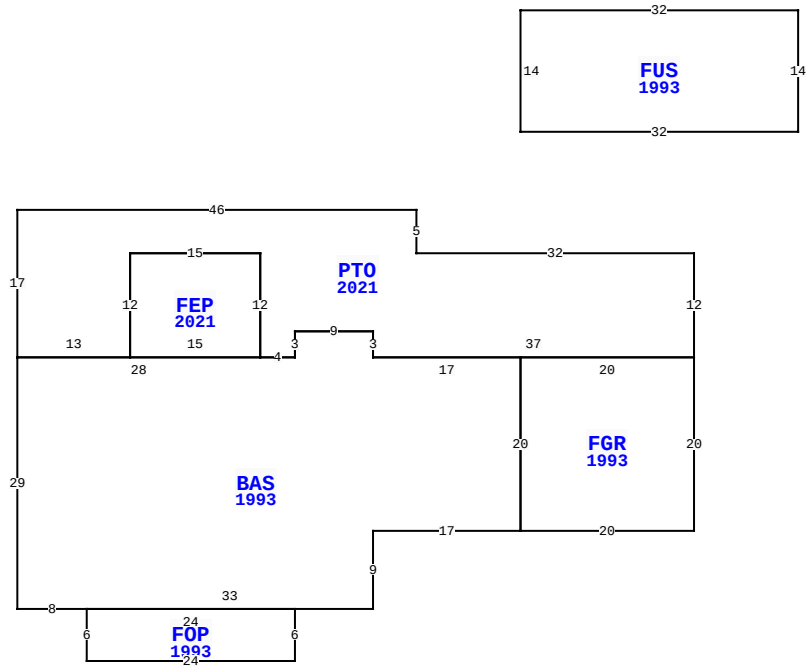

86115 JOHN GOODBREAD LN, YULEE

BLD DATE		LGL DATE	
XF DATE		LAND DATE	
INC DATE		AG DATE	

VALUATION SUMMARY

VALUATION BY		STANDARD
Tax Group: 4	Tax Dist:	
BUILDING MARKET VALUE		200,853
TOTAL MARKET OB/XF VALUE		6,236
TOTAL LAND VALUE - MARKET		136,975
TOTAL MARKET VALUE		344,064
SOH/AGL Deduction		161,160
ASSESSED VALUE		182,904
TOTAL EXEMPTION VALUE	HX HB	50,000
BASE TAXABLE VALUE		132,904
TOTAL JUST VALUE		344,064
NCON VALUE		0
INCOME VALUE		
PREVIOUS YEAR MKT VALUE		334,916

PERMIT NUM	DESCRIPTION	AMT	ISSUED
963152	XFOB	2,652	07/01/1996

SALES DATA

OFF RECORD Number	DATE	TYPE INST	Q U /	V I /	RSN CD	SALE PRICE
0616/0105	1/03/1991	WD	U	V	01	100

GRANTOR: KEELING JANE G

GRANTEE: KEELING ROBERT & JA

BUILDING NOTES

BUILDING DIMENSIONS

BAS=[YR=1993] W17 N3W9 S3 W4 FEP=[YR=2021] N12 W15 S12 E15$ W28 S29 E8 FOP=[YR=1993] S6 E24N6 W24$ E33 N9 E17 FGR=[YR=1993] E20N20 PTO=[YR=2021] N12 W32 N5 W46 S17 E13 N12 E15 S12 E4 N3 E9 S3 E37$ W20 S20$ N20$ PTR=N40 FUS=[YR=1993] E32 S14 W32 N14$ S40$.

EXTRA FEATURES

L N	OB/XF CODE	DESCRIPTION	BLD	CAP	L	W	UNITS	UT	Adj R	ADJ UNIT PRICE	ORIG COND	YEAR ON	YEAR ACTUAL	Q	% COND	OB/XF MKT VALUE	NOTES
1	0811	CONCRETE B	0	100	0	0	661.00	SF	5.20	5.20	100	1991	1991	3	62	2,131	
2	0810	CONCRETE A	0	100	70	2	140.00	SF	6.50	6.50	100	1992	1992	3	64	582	
3	0810	CONCRETE A	0	100	20	20	400.00	SF	6.50	6.50	100	1996	1996	3	72	1,872	
4	0940	SHEDS/PORT	0	100	12	16	192.00	SF	30.00	30.00	100	1996	1996	3	20	1,152	
5	0350	CARPORT WD	0	100	12	16	192.00	SF	13.00	13.00	100	1996	1996	3	20	499	

LAND DESCRIPTION

TOTAL OB/XF 6,236

L N	USE CODE	CLS	LAND USE DESCRIPTION	CAP	R D	LOC ZONE	FRONT	DEPTH	TOT LND UTS	UNIT TYPE	D T	DPTH FACT	% COND	TOT ADJ	UNIT PRICE	ADJ UNIT PRICE	LAND VALUE	OTHER ADJUSTMENTS AND NOTES	YEAR	DENSITY	DECL	FRZ	YR	CONSRV
1	000115	C	SFR ACRES	100		OR	0.00	0.00	1.71	AC		1.00	1.00	1.00	80,000.00	80,000.00	136,800							
2	009630	C	SWAMP	100		OR			0.35	AC		1.00	1.00	1.00	500.00	500.00	175							

REVIEW DATE 03/08/2022 BY NWA Total Acres: 2.06 Total Land Value: 136,975 Market: 0 Agricultural: 0 Common: 136,975 PRINTED 08/06/2024 BY SYS