LOT 19
IN OR 2532/842
FLOOD SURVEY UNR SUB

COULTER DALE M & SUSAN L
86339 HARRY GREEN RD
YULEE, FL 32097

2024

52-3N-27-4890-0019-0000

NASSAU COUNTY PROPERTY

BUILDING CHARACTERISTICS

ELEMENT	CD	CONSTRUCTION
Exterior Wall	31	HARDIE BRD 100
Roof Structur	03	GABLE/HIP 100
Roof Cover	03	COMP SHNGL 100
Interior Wall	05	DRYWALL 100
Interior Floo	13	LVT/LAMNT 100
Air Condition	03	CENTRAL 100
Heating Type	04	AIR DUCTED 100
Bedrooms		3 100
Bathrooms		2 100
Frame	02	WOOD FRAME 100
Stories	1.	1. 100
Units		1 100
Quality	04	Quality Level 04

DOR CODE	0100	SINGLE FAMILY	
MAP NUM		MKT AREA	04
NEIGHBORHOOD/LOC	4053.00		

AREA TYPE	TOTAL GROSS AREA	PCT OF BASE	TOT ADJ AREA	SUBAREA MARKET VALUE
BAS	1,995	100	1,995	265,814
FGR	529	55	291	38,773
FOP	120	30	36	4,797
FOP	318	30	95	12,658
FUS	493	100	493	65,687
STR	33	10	3	400
TOTALS	3,488		2,913	388,128

MARKET ADJUSTMENTS

TYPE	MDL	EFF. AREA	TOT ADJ PTS	EFF. BASE RATE	REPL. COST NEW	AYB	EYB	ECON	FNCT		NORM	% COND
0900	01	2,913	106.5960	133.24	388,128	2023	2023	0	0	0	0.00	100.00

3 SNGL FAM – 100% - 2024 Heated Area: 2488 HX Base Yr 2019

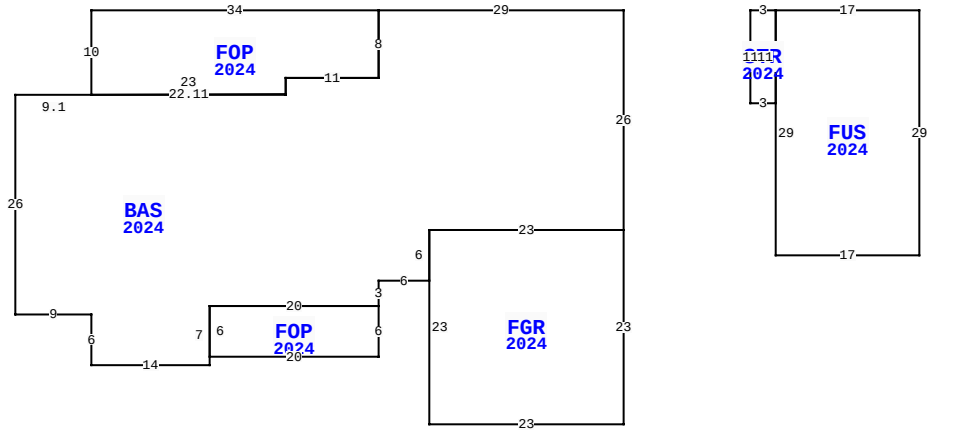

86339 HARRY GREEN RD, YULEE

BLD DATE		LGL DATE	
XF DATE		LAND DATE	
INC DATE		AG DATE	

NASSAU COUNTY PROPERTY — VALUATION SUMMARY

VALUATION BY		STANDARD
Tax Group: 4	Tax Dist:	
BUILDING MARKET VALUE		388,128
TOTAL MARKET OB/XF VALUE		17,315
TOTAL LAND VALUE - MARKET		80,000
TOTAL MARKET VALUE		485,443
SOH/AGL Deduction		44,129
ASSESSED VALUE		441,314
TOTAL EXEMPTION VALUE	HX HB	50,000
BASE TAXABLE VALUE		391,314
TOTAL JUST VALUE		485,443
NCON VALUE		393,150
INCOME VALUE		
PREVIOUS YEAR MKT VALUE		145,674

PERMIT NUM	DESCRIPTION	AMT	ISSUED
23001588	CO ISSUED	0	02/06/2023
22002640	NEW CONSTR	339,186	02/16/2022
MH982444	MH MOVE-ON	0	11/01/1998

SALES DATA

OFF RECORD Number	DATE	TYPE INST	Q / U	V / I	RSN CD	SALE PRICE
2532/0842	1/20/2022	WD	U	I	11	100
GRANTOR: COULTER DALE M						
GRANTEE: COULTER DALE M & SU						
0868/0591	2/17/1999	WD	Q	I		18,000
GRANTOR: SUTTON THOMAS L						
GRANTEE: COULTER DALE M						

BUILDING NOTES

EXTRA FEATURES

LN	OB/XF CODE	DESCRIPTION	BLD	CAP	L	W	UNITS	UT	Adj R	ADJ UNIT PRICE	ORIG COND	YEAR ON	YEAR ACTUAL	Q	% COND	OB/XF MKT VALUE	NOTES
3	0810	CONCRETE A	0	100	0	0	572.00	SF	6.50	6.50	100	1975	1975	3	26	967	
4	0510	GARAGE WD-	0	100	25	25	625.00	SF	35.00	35.00	100	1999	1999	3	27	5,906	
5	0510	GARAGE WD-	0	100	20	20	400.00	SF	29.75	29.75	100	2002	2002	3	30	3,570	
6	0810	CONCRETE A	0	100	0	0	347.00	SF	6.50	6.50	100	2002	2002	3	82	1,850	
7	0351	CARPORT MT	0	100	30	18	540.00	SF	10.00	10.00	100	2024	2021		93	5,022	

BUILDING DIMENSIONS

BAS=[YR=2024;ORIG=10,10] E9.1 U0.1R22.11 N1.11 E11 N8 E29 S26 W23 S6 W6 S3 W20 S7 W14 N6 W9 N26 $
FOP=[YR=2024;ORIG=53,35] W20 S6 E20 N6 $
FGR=[YR=2024;ORIG=82,26] W23 S23 E23 N23 $
FOP=[YR=2024;ORIG=19,10] E23 N2 E11 N8 W34 S10 $
FUS=[YR=2024;ORIG=100,0] E17 S29 W17 N29 $
STR=[YR=2024;ORIG=100,0] W3 S11 E3 N11 $
.

LAND DESCRIPTION

TOTAL OB/XF 17,315

LN	USE CODE	CLS	LAND USE DESCRIPTION	CAP	RD	LOC ZONE	FRONT	DEPTH	TOT LND UTS	UNIT TYPE	DT	DPTH FACT	% COND	TOT ADJ	UNIT PRICE	ADJ UNIT PRICE	LAND VALUE	OTHER ADJUSTMENTS AND NOTES	YEAR	DENSITY	DECL	FRZ	YR	CONSRV
1	000115	C	SFR ACRES	100		RM	0.00	0.00	1.00	AC		1.00	1.00	1.00	80,000.00	80,000.00	80,000							

REVIEW DATE 12/13/2022 BY NW Total Acres: 1.00 Total Land Value: 80,000 Market: 0 Agricultural: 0 Common: 80,000 PRINTED 08/06/2024 BY SYS