LOT 63
PAGE HILL #3 PB 6/341

PROPERTIES BY KD LLC
86407 MOONLIT WALK CIR
YULEE, FL 32097

2024

51-3N-27-1627-0063-0000

NASSAU COUNTY PROPERTY

BUILDING CHARACTERISTICS

ELEMENT	CD	CONSTRUCTION
Exterior Wall	30	VINYL 70
Exterior Wall	20	FACE BRICK 30
Roof Structur	03	GABLE/HIP 100
Roof Cover	03	COMP SHNGL 100
Interior Wall	05	DRYWALL 100
Interior Floo	08	SHT VINYL 80
Interior Floo	14	CARPET 20
Air Condition	03	CENTRAL 100
Heating Type	04	AIR DUCTED 100
Bedrooms		3 100
Bathrooms		2 100
Frame	02	WOOD FRAME 100
Stories	1.	1. 100
Units		0 100
Occupancy	00	NONE 100
Quality	05	Quality Level 05
DOR CODE	0100	SINGLE FAMILY
MAP NUM		MKT AREA 04
NEIGHBORHOOD/LOC	4039.00	

AREA TYPE	TOTAL GROSS AREA	PCT OF BASE	TOT ADJ AREA	SUBAREA MARKET VALUE
BAS	1,388	100	1,388	177,642
FGR	427	55	235	30,076
FOP	9	30	3	384
UOP	40	20	8	1,023
USP	140	30	42	5,375
TOTALS	2,004		1,676	214,502

MARKET ADJUSTMENTS

TYPE	MDL	EFF. AREA	TOT ADJ PTS	EFF. BASE RATE	REPL. COST NEW	AYB	EYB	ECON	FNCT		NORM	% COND
0100	01	1,676	120.8900	137.81	230,970	2005	2010	0	0	0	7.13	92.87

1 SINGLE FAM – 0% - 2024 Heated Area: 1388 HX Base Yr

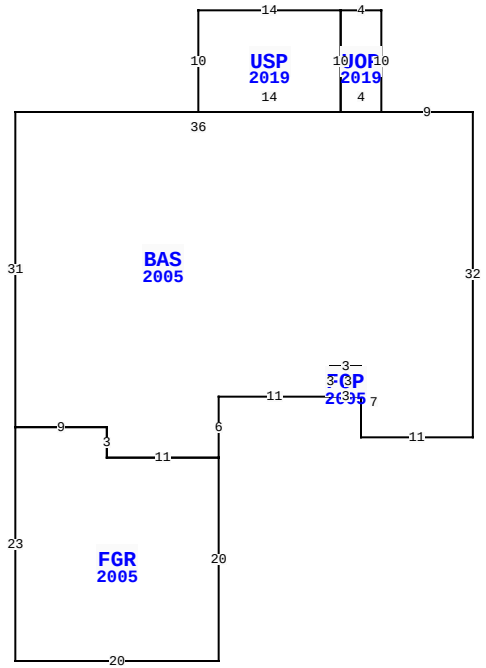

861368 WORTHINGTON DR, YULEE

BLD DATE		LGL DATE	
XF DATE		LAND DATE	
INC DATE		AG DATE	

NASSAU COUNTY PROPERTY — VALUATION SUMMARY

VALUATION BY	STANDARD
Tax Group: 4	Tax Dist:
BUILDING MARKET VALUE	241,322
TOTAL MARKET OB/XF VALUE	5,366
TOTAL LAND VALUE - MARKET	80,000
TOTAL MARKET VALUE	326,688
SOH/AGL Deduction	0
ASSESSED VALUE	326,688
TOTAL EXEMPTION VALUE	0
BASE TAXABLE VALUE	326,688
TOTAL JUST VALUE	326,688
NCON VALUE	0
INCOME VALUE	
PREVIOUS YEAR MKT VALUE	277,976

PERMIT NUM	DESCRIPTION	AMT	ISSUED
19006835	24X50 STOR	58,476	06/26/2019
E0414029	ELEC OTHER	2,000	12/01/2004
M0409045	H/AC	0	12/01/2004
B0413357	NEW CONSTR	136,000	07/01/2004

SALES DATA

OFF RECORD Number	DATE	TYPE INST	Q / U	V / I	RSN CD	SALE PRICE
2650/125	6/15/2023	QC	U	I	11	148,000
GRANTOR: DAVIDSON DOUGLAS S						
GRANTEE: PROPERTIES BY KD LL						
2277/1310	5/23/2019	WD	Q	I	01	205,000
GRANTOR: HUTCHISON BRYAN L & A						
GRANTEE: DAVIDSON DOUGLAS S						

BUILDING NOTES

BUILDING DIMENSIONS

BAS=[YR=2005] W9 UOP=[YR=2019] N10 W4 USP=[YR=2019] W14 S10E14 N10$ S10 E4 $ W36 S31 FGR=[YR=2005] S23 E20 N20 W11 N3 W9$ E9 S3 E11 N6 E11 FOP=[YR=2005] E3 N3 W3 S3$ N3 E3S7 E11 N32$.

EXTRA FEATURES

LN	OB/XF CODE	DESCRIPTION	BLD	CAP	L	W	UNITS	UT	Adj R	ADJ UNIT PRICE	ORIG COND	YEAR ON	YEAR ACTUAL	Q	% COND	OB/XF MKT VALUE	NOTES
1	0811	CONCRETE B	0	0	0	0	1,000.00	SF	6.24	6.24	100	2005	2005	3	86	5,366	

LAND DESCRIPTION

TOTAL OB/XF 5,366

LN	USE CODE	CLS	LAND USE DESCRIPTION	CAP	RD	LOC ZONE	FRONT	DEPTH	TOT LND UTS	UNIT TYPE	DT	DPTH FACT	% COND	TOT ADJ	UNIT PRICE	ADJ UNIT PRICE	LAND VALUE	OTHER ADJUSTMENTS AND NOTES	YEAR	DENSITY	DECL	FRZ	YR	CONSRV
1	000100	C	SFR	0		RSF-1	0.00	0.00	1.00	LT		1.00	1.00	1.00	80,000.00	80,000.00	80,000							

REVIEW DATE 08/30/2022 BY NWA Total Acres: 0.00 Total Land Value: 80,000 Market: 0 Agricultural: 0 Common: 80,000 PRINTED 08/06/2024 BY SYS

LOT 63
PAGE HILL #3 PB 6/341

PROPERTIES BY KD LLC
86407 MOONLIT WALK CIR
YULEE, FL 32097

2024

51-3N-27-1627-0063-0000

BUILDING CHARACTERISTICS

ELEMENT	CD	CONSTRUCTION
Exterior Wall	25	MOD METAL 100
Roof Structur	03	GABLE/HIP 100
Roof Cover	12	MODULAR MT 100
Interior Wall	07	NONE 100
Interior Floo	03	CONC FINSH 100
Air Condition	01	NONE 100
Heating Type	01	NONE 100
Bedrooms		0 100
Bathrooms		0 100
Frame	05	STEEL 100
Stories	1.	1. 100
Units		0 100
Occupancy	00	NONE 100
Quality	05	Quality Level 05
DOR CODE	0100	SINGLE FAMILY
MAP NUM		MKT AREA 04
NEIGHBORHOOD/LOC	4039.00	

AREA TYPE	TOTAL GROSS AREA	PCT OF BASE	TOT ADJ AREA	SUBAREA MARKET VALUE
BAS	1,200	100	1,200	25,955
FCP	160	25	40	865
TOTALS	1,360		1,240	26,820

MARKET ADJUSTMENTS

TYPE	MDL	EFF. AREA	TOT ADJ PTS	EFF. BASE RATE	REPL. COST NEW	AYB	EYB	ECON	FNCT		NORM	% COND
6500	01	1,240	53.6360	22.53	27,937	2019	2019	0	0	0	4.00	96.00

2 GARAGE RES – 0% - 2024 Heated Area: 1200 HX Base Yr

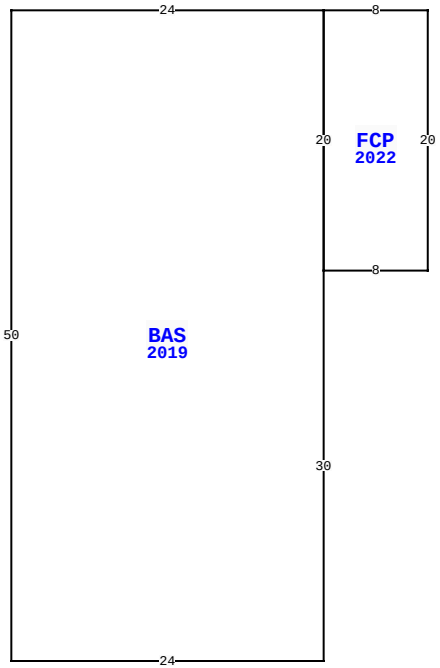

861368 WORTHINGTON DR, YULEE

BLD DATE		LGL DATE	
XF DATE		LAND DATE	
INC DATE		AG DATE	

NASSAU COUNTY PROPERTY

PAGE 2 of 2 4

VALUATION SUMMARY

VALUATION BY	STANDARD
Tax Group: 4	Tax Dist:
BUILDING MARKET VALUE	241,322
TOTAL MARKET OB/XF VALUE	5,366
TOTAL LAND VALUE - MARKET	80,000
TOTAL MARKET VALUE	326,688
SOH/AGL Deduction	0
ASSESSED VALUE	326,688
TOTAL EXEMPTION VALUE	0
BASE TAXABLE VALUE	326,688
TOTAL JUST VALUE	326,688
NCON VALUE	0
INCOME VALUE	
PREVIOUS YEAR MKT VALUE	277,976

PERMIT NUM	DESCRIPTION	AMT	ISSUED

SALES DATA

OFF RECORD Number	DATE	TYPE INST	Q U /	V I /	RSN CD	SALE PRICE
2650/125	6/15/2023	QC	U	I	11	148,000
GRANTOR: DAVIDSON DOUGLAS S						
GRANTEE: PROPERTIES BY KD LL						
2277/1310	5/23/2019	WD	Q	I	01	205,000
GRANTOR: HUTCHISON BRYAN L & A						
GRANTEE: DAVIDSON DOUGLAS S						

BUILDING NOTES

BUILDING DIMENSIONS

BAS=[YR=2019] W24 S50 E24 N30 FCP=[YR=2022] E8 N20 W8 S20$ N20$.

EXTRA FEATURES

LN	OB/XF CODE	DESCRIPTION	BLD	CAP	L	W	UNITS	UT	Adj R	ADJ UNIT PRICE	ORIG COND	YEAR ON	YEAR ACTUAL	Q	% COND	OB/XF MKT VALUE	NOTES

LAND DESCRIPTION

TOTAL OB/XF 0

LN	USE CODE	CLS	LAND USE DESCRIPTION	CAP	RD	LOC ZONE	FRONT	DEPTH	TOT LND UTS	UNIT TYPE	DT	DPTH FACT	% COND	TOT ADJ	UNIT PRICE	ADJ UNIT PRICE	LAND VALUE	OTHER ADJUSTMENTS AND NOTES	YEAR	DENSITY	DECL	FRZ	YR	CONSRV

REVIEW DATE 08/30/2022 BY NWA Total Acres: 0.00 Total Land Value: 80,000 Market: 0 Agricultural: 0 Common: 80,000 PRINTED 08/06/2024 BY SYS