LOT 6
PAGE HILL #3 PB 6/341

AYARS BONNIE L L/E/
86905 WORTHINGTON DRIVE
YULEE, FL 32097

2024

51-3N-27-1627-0006-0000

NASSAU COUNTY PROPERTY

BUILDING CHARACTERISTICS

ELEMENT	CD	CONSTRUCTION
Exterior Wall	20	FACE BRICK 100
Roof Structur	03	GABLE/HIP 100
Roof Cover	03	COMP SHNGL 100
Interior Wall	05	DRYWALL 100
Interior Floo	11	CLAY TILE 70
Interior Floo	14	CARPET 30
Air Condition	03	CENTRAL 100
Heating Type	04	AIR DUCTED 100
Bedrooms		4 100
Bathrooms		3 100
Frame	02	WOOD FRAME 100
Stories	1.	1. 100
Units		0 100
Occupancy	00	NONE 100
Quality	05	Quality Level 05
DOR CODE	0100	SINGLE FAMILY
MAP NUM		MKT AREA 04
NEIGHBORHOOD/LOC	4039.00	

AREA TYPE	TOTAL GROSS AREA	PCT OF BASE	TOT ADJ AREA	SUBAREA MARKET VALUE
BAS	2,640	100	2,640	328,925
FGR	462	55	254	31,646
FOP	12	30	4	499
FOP	245	30	74	9,220
PTO	368	5	18	2,243
TOTALS	3,727		2,990	372,533

MARKET ADJUSTMENTS

TYPE	MDL	EFF. AREA	TOT ADJ PTS	EFF. BASE RATE	REPL. COST NEW	AYB	EYB	ECON	FNCT		NORM	% COND
0100	01	2,990	122.1154	139.21	416,238	2004	2009	0	0	0	10.50	89.50

1 SINGLE FAM – 100% - 2014 Heated Area: 2640 HX Base Yr 2014

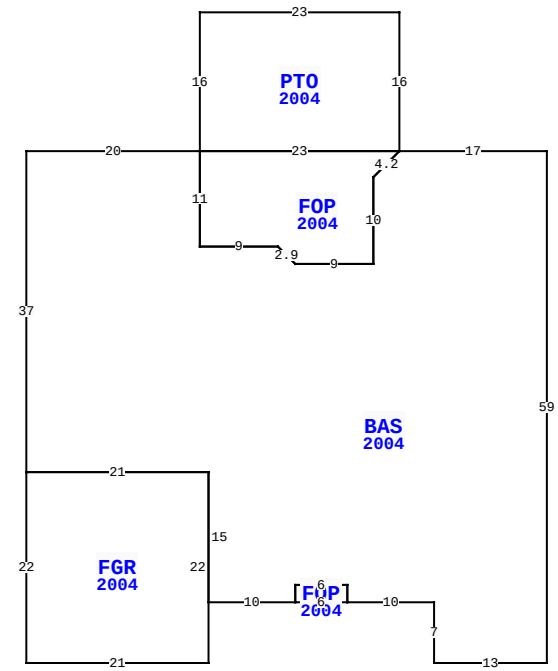

86905 WORTHINGTON DR, YULEE

BLD DATE		LGL DATE	
XF DATE		LAND DATE	
INC DATE		AG DATE	

VALUATION SUMMARY

VALUATION BY		STANDARD
Tax Group: 4	Tax Dist:	
BUILDING MARKET VALUE		372,533
TOTAL MARKET OB/XF VALUE		69,151
TOTAL LAND VALUE - MARKET		80,000
TOTAL MARKET VALUE		521,684
SOH/AGL Deduction		268,645
ASSESSED VALUE		253,039
TOTAL EXEMPTION VALUE	WX HX HB	55,000
BASE TAXABLE VALUE		198,039
TOTAL JUST VALUE		521,684
NCON VALUE		0
INCOME VALUE		
PREVIOUS YEAR MKT VALUE		438,504

PERMIT NUM	DESCRIPTION	AMT	ISSUED
20001710	REPAIR/RRF	26,000	03/05/2020
B1327314	SWIM POOL	20,000	06/01/2013
B0412273	NEW CONSTR	184,256	02/01/2004
E0412412	NEW CONSTR	2,000	02/01/2004
M047922	H/AC	0	02/01/2004
P047596	NEW CONSTR	0	02/01/2004

SALES DATA

OFF RECORD Number	DATE	TYPE INST	Q / U	V / I	RSN CD	SALE PRICE
2644/1586	5/31/2023	LE	U	I	11	100
GRANTOR: AYARS BONNIE LEE						
GRANTEE: WALRATH JASON						
1832/1855	12/31/2012	WD	Q	I	01	223,000
GRANTOR: FARLER RICKY H						
GRANTEE: AYARS CARL E & BONN						

BUILDING NOTES

BUILDING DIMENSIONS

BAS=[YR=2004] W17 PTO=[YR=2004] N16 W23 S16 FOP=[YR=2004] S11 E9 D2 R2 E9 N10 R3 U3 W23$ E23$ D3 L3 S10 W9 U2 L2 W9 N11 W20 S37 FGR=[YR=2004] S22 E21 N22 W21$ E21 S15 E10 FOP=[YR=2004] E6 N2 W6 S2$ N2 E6 S2 E10 S7 E13 N59$.

EXTRA FEATURES

LN	OB/XF CODE	DESCRIPTION	BLD	CAP	L	W	UNITS	UT	Adj R	ADJ UNIT PRICE	ORIG COND	YEAR ON	YEAR ACTUAL	Q	% COND	OB/XF MKT VALUE	NOTES
1	0812	CONCRETE C	0	100	0	0	1,893.00	SF	4.80	4.80	100	2004	2004	3	84	7,633	
2	0462	ST/AL FNC	0	100	0	0	1,872.00	SF	12.00	12.00	100	2004	2004	3	36	8,087	
3	0940	SHEDS/PORT	0	100	20	10	200.00	SF	36.00	36.00	100	2013	2013	3	60	4,320	
4	0855	CONC PAVER	0	100	0	0	720.00	SF	12.00	12.00	100	2013	2013	3	94	8,122	
5	0861	POOL GUNIT	0	100	28	14	392.00	SF	102.00	102.00	100	2013	2013	3	71	28,389	
6	0911	SCRN RM A	0	100	50	20	1,000.00	SF	21.00	21.00	100	2013	2013	3	60	12,600	

LAND DESCRIPTION

TOTAL OB/XF 69,151

LN	USE CODE	CLS	LAND USE DESCRIPTION	CAP	RD	LOC ZONE	FRONT	DEPTH	TOT LND UTS	UNIT TYPE	DT	DPTH FACT	% COND	TOT ADJ	UNIT PRICE	ADJ UNIT PRICE	LAND VALUE	OTHER ADJUSTMENTS AND NOTES	YEAR	DENSITY	DECL	FRZ	YR	CONSRV
1	000100	C	SFR	100		RSF-1	0.00	0.00	1.00	LT		1.00	1.00	1.00	80,000.00	80,000.00	80,000							

REVIEW DATE 05/26/2020 BY NWX Total Acres: 0.00 Total Land Value: 80,000 Market: 0 Agricultural: 0 Common: 80,000 PRINTED 08/06/2024 BY SYS