LOT 39
CREEKSIDE #2 PB 7/32

KIRKMAN C G JR
87239 BRANCH CREEK DRIVE
YULEE, FL 32097

2024

51-3N-27-0262-0039-0000

BUILDING CHARACTERISTICS

ELEMENT	CD	CONSTRUCTION
Exterior Wall	16	WD FR STUC 100
Roof Structur	03	GABLE/HIP 100
Roof Cover	03	COMP SHNGL 100
Interior Wall	05	DRYWALL 100
Interior Floo	14	CARPET 80
Interior Floo	12	HARDWOOD 20
Air Condition	03	CENTRAL 100
Heating Type	04	AIR DUCTED 100
Bedrooms		4 100
Bathrooms		2.5 100
Frame	02	WOOD FRAME 100
Stories	2.	2. 100
Units		0 100
Occupancy	00	NONE 100
Quality	02	Quality Level 02

DOR CODE 0100 SINGLE FAMILY
MAP NUM | MKT AREA 04
NEIGHBORHOOD/LOC 4037.00

AREA TYPE	TOTAL GROSS AREA	PCT OF BASE	TOT ADJ AREA	SUBAREA MARKET VALUE
BAS	1,167	100	1,167	131,960
FGR	486	55	267	30,191
FOP	129	30	39	4,410
FSP	96	40	38	4,297
FUS	1,208	100	1,208	136,596
TOTALS	3,086		2,719	307,455

MARKET ADJUSTMENTS

TYPE	MDL	EFF. AREA	TOT ADJ PTS	EFF. BASE RATE	REPL. COST NEW	AYB	EYB	ECON	FNCT		NORM	% COND
0900	01	2,719	99.4080	124.26	337,863	2005	2005	0	0	0	9.00	91.00

1 SNGL FAM – 0% - 0 Heated Area: 2375 HX Base Yr

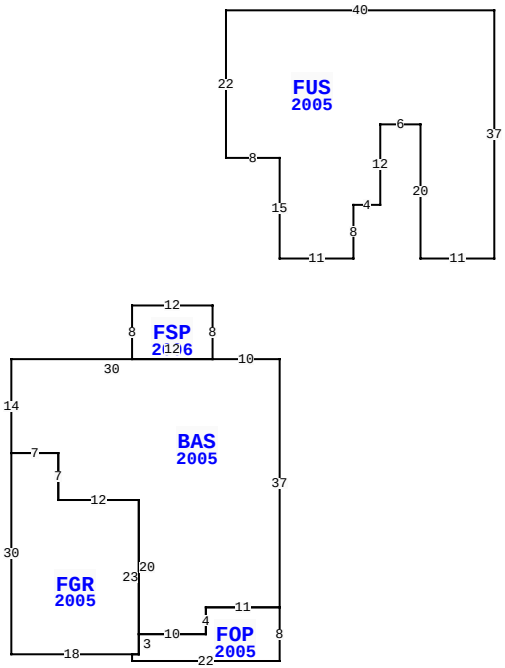

87239 BRANCH CREEK DR, YULEE

BLD DATE	03/03/2023 NW	LGL DATE	
XF DATE		LAND DATE	06/15/2023 MLU
INC DATE		AG DATE	

NASSAU COUNTY PROPERTY

PAGE 1 of 1 4

VALUATION SUMMARY

VALUATION BY	STANDARD
Tax Group: 4	Tax Dist:
BUILDING MARKET VALUE	307,455
TOTAL MARKET OB/XF VALUE	10,437
TOTAL LAND VALUE - MARKET	75,000
TOTAL MARKET VALUE	392,892
SOH/AGL Deduction	62,619
ASSESSED VALUE	330,273
TOTAL EXEMPTION VALUE	0
BASE TAXABLE VALUE	330,273
TOTAL JUST VALUE	392,892
NCON VALUE	0
INCOME VALUE	
PREVIOUS YEAR MKT VALUE	379,198

PERMIT NUM	DESCRIPTION	AMT	ISSUED
M10105	MECH OTHER	0	08/01/2005
E15312	ELEC OTHER	2,000	07/01/2005
P09165	OTHER	0	07/01/2005
R0507816	REPAIR/RRF	2,800	06/01/2005
B0515489	NEW CONSTR	175,294	06/01/2005
E14820	ELEC OTHER	2,000	04/01/2005

SALES DATA

OFF RECORD Number	DATE	TYPE INST	Q / U	V / I	RSN CD	SALE PRICE
2352/1057	4/07/2020	WD	Q	I	01	250,000
GRANTOR: SMITH ALBERT & THAO						
GRANTEE: KIRKMAN C G JR						
1401/0495	4/04/2006	WD	Q	I		278,400
GRANTOR: SEDA CONSTRUCTION COM						
GRANTEE: SMITH ALBERT & THAO						

BUILDING NOTES

BUILDING DIMENSIONS

BAS=[YR=2005] W10 FSP=[YR=2006] N8 W12 S8 E12$ W30 S14 FGR=[YR=2005] S30 E18 FOP=[YR=2005] S1 E22 N8 W11 S4 W10 S3 W1$ E1 N23 W12 N7 W7$ E7 S7 E12 S20 E10 N4 E11 N37$ PTR= N15 FUS=[YR=2005] N15 W8 N22 E40 S37 W11 N20 W6 S12 W4 S8 W11$ S15$.

EXTRA FEATURES

LN	OB/XF CODE	DESCRIPTION	BLD	CAP	L	W	UNITS	UT	Adj R	ADJ UNIT PRICE	ORIG COND	YEAR ON	YEAR ACTUAL	Q	% COND	OB/XF MKT VALUE	NOTES
1	0500	FP-PRE FAB	0	0	0	0	1.00	UT	3,500.00	3,500.00	100	2005	2005	3	89	3,115	
2	0811	CONCRETE B	0	0	0	0	592.00	SF	5.20	5.20	100	2005	2005	3	86	2,647	
3	0855	CONC PAVER	0	0	0	0	703.00	SF	7.00	7.00	100	2014	2014	3	95	4,675	

LAND DESCRIPTION

TOTAL OB/XF 10,437

LN	USE CODE	CLS	LAND USE DESCRIPTION	CAP	RD	LOC ZONE	FRONT	DEPTH	TOT LND UTS	UNIT TYPE	DT	DPTH FACT	% COND	TOT ADJ	UNIT PRICE	ADJ UNIT PRICE	LAND VALUE	OTHER ADJUSTMENTS AND NOTES	YEAR	DENSITY	DECL	FRZ	YR	CONSRV
1	000134	C	SFR POND	0	0003	PUD	0.00	0.00	1.00	LT		1.00	1.00	1.00	75,000.00	75,000.00	75,000							

REVIEW DATE 05/12/2019 BY KBA Total Acres: 0.00 Total Land Value: 75,000 Market: 0 Agricultural: 0 Common: 75,000 PRINTED 08/06/2024 BY SYS