PT SEC 51-3N-27E IN OR 2041/53
(EX PT IN OR 2700/164)
ESMT IN OR 1670/1998

SHOPS OF YULEE LLC/
463155 SR 200 MAILBOX #12
YULEE, FL 32097

2024

51-3N-27-0000-0028-0000

BUILDING CHARACTERISTICS

ELEMENT	CD	CONSTRUCTION
Exterior Wall	15	CONC BLOCK 100
Roof Structur	10	STEEL FRME 100
Roof Cover	04	BUILT-UP 100
Interior Wall	05	DRYWALL 100
Interior Floo	03	CONC FINSH 70
Interior Floo	07	CORK/VTILE 30
Ceiling	01	FIN.SUSPD 100
Air Condition	03	CENTRAL 100
Heating Type	04	AIR DUCTED 100
Fixtures		22 100
Frame	05	STEEL 100
Story Height		15 100
RMS		21 100
Stories	1.	1. 100
Units		0 100
Occupancy	00	NONE 100
Quality	03	Quality Level 03
DOR CODE	1600	COMMUNITY SHOPPING
MAP NUM		MKT AREA 04
NEIGHBORHOOD/LOC	4051.00	

AREA TYPE	TOTAL GROSS AREA	PCT OF BASE	TOT ADJ AREA	SUBAREA MARKET VALUE
BAS	980	100	980	74,113
BAS	1,050	100	1,050	79,406
BAS	1,120	100	1,120	84,700
BAS	2,450	100	2,450	185,281
BAS	1,050	100	1,050	79,406
BAS	1,645	100	1,645	124,403
BAS	1,330	100	1,330	100,581
BAS	1,680	100	1,680	127,050
CAN	224	30	67	5,067
PTO	932	5	47	3,554
TOTALS	12,461		11,419	863,562

MARKET ADJUSTMENTS

TYPE	MDL	EFF. AREA	TOT ADJ PTS	EFF. BASE RATE	REPL. COST NEW	AYB	EYB	ECON	FNCT	AP	NORM	% COND
1602	04	11,419	103.2871	110.00	1,256,090	2014	2014	0	0	20	11.25	68.75

1 NBHD SHOP – 0% - 0 Heated Area: 11305 HX Base Yr

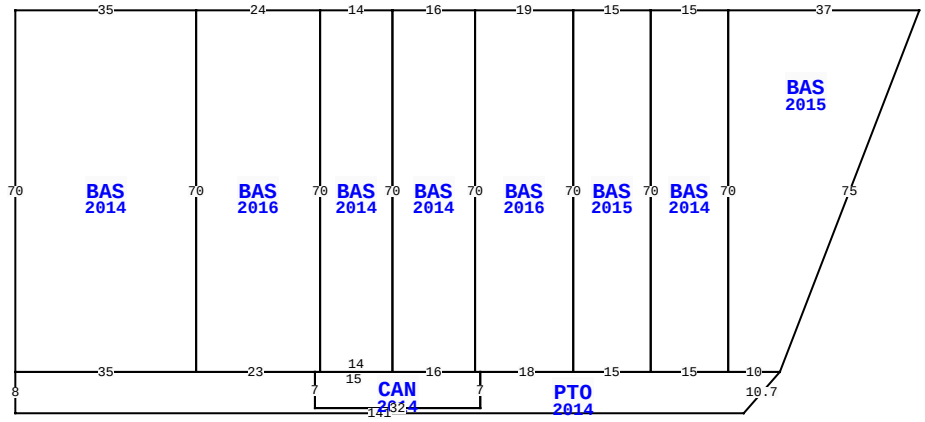

463155 SR 200, YULEE

BLD DATE	07/29/2024	KW	LGL DATE		
XF DATE	07/29/2024	KW	LAND DATE	06/16/2022	KK
INC DATE			AG DATE		

NASSAU COUNTY PROPERTY

PAGE 1 of 3 4

VALUATION SUMMARY

VALUATION BY	DIRECT_CAP
Tax Group: 4	Tax Dist:
BUILDING MARKET VALUE	3,194,224
TOTAL MARKET OB/XF VALUE	0
TOTAL LAND VALUE - MARKET	0
TOTAL MARKET VALUE	3,194,224
SOH/AGL Deduction	300,649
ASSESSED VALUE	2,893,575
TOTAL EXEMPTION VALUE	0
BASE TAXABLE VALUE	2,893,575
TOTAL JUST VALUE	3,194,224
NCON VALUE	0
INCOME VALUE	3,194,224
PREVIOUS YEAR MKT VALUE	3,319,849

PERMIT NUM	DESCRIPTION	AMT	ISSUED
B23007131	HAIR MECHANIX ___		06/02/2023
21012268	BUILD OUT - UNIT	118,553	09/14/2021
20011591	BUILD OUT - UNIT	275,041	02/04/2021
18005802	STATE FARM UNIT	65,836	08/30/2018
18004818	REMODEL - UNIT 8	40,000	07/18/2018
B1631399	NEW BATHROOM STE	2,500	03/01/2016

SALES DATA

OFF RECORD Number	DATE	TYPE INST	Q / U	V / I	RSN CD	SALE PRICE
2041/0053	4/19/2016	SW	U	I	11	100
GRANTOR: SHOPS OF YULEE LLC						
GRANTEE: SHOPS OF YULEE LLC						
1403/1905	4/13/2006	TD	Q	I		1,675,000
GRANTOR: HANCE ANN CREWS TRUST						
GRANTEE: SHOPS OF YULEE LLC						

BUILDING NOTES

BUILDING DIMENSIONS

BAS=[YR=2014;ORIG=0,0] N70 E35 S70 W35 $
BAS=[YR=2016;ORIG=35,-70] E24 S70 W1 W23 N70 $
BAS=[YR=2015;ORIG=138,-70] E37 D70L27 W10 N70 $
BAS=[YR=2016;ORIG=89,-70] E19 S70 W18 W1 N70 $
PTO=[YR=2014;ORIG=0,0] E35 E23 S7 E32 N7 E18 E15 E15 E10 D8L7 W141 N8 $
BAS=[YR=2014;ORIG=73,-70] E16 S70 W16 N70 $
BAS=[YR=2015;ORIG=108,-70] E15 S70 W15 N70 $
BAS=[YR=2014;ORIG=123,-70] E15 S70 W15 N70 $
BAS=[YR=2014;ORIG=59,-70] E14 S70 W14 N70 $
CAN=[YR=2014;ORIG=90,0] S7 W32 N7 E15 E16 E1 $
.

EXTRA FEATURES

LN	OB/XF CODE	DESCRIPTION	BLD	CAP	L	W	UNITS	UT	Adj R	ADJ UNIT PRICE	ORIG COND	YEAR ON	YEAR ACTUAL	Q	% COND	OB/XF MKT VALUE	NOTES
1	0819	CONC 12"	0	0	15	2	30.00	SF	9.50	9.50	100	2011	2011	3	92	262	
2	4950	BOLLARD	0	0	0	0	4.00	UT	100.00	100.00	100	2011	2011	3	100	400	
3	0810	CONCRETE A	0	0	10	10	100.00	SF	6.50	6.50	100	2011	2011	3	92	598	
4	0803	ASPHALT C	0	0	0	0	90,685.00	SF	2.00	2.00	100	2013	2013	3	72	130,586	
5	0400	CONC CURB	0	0	0	0	3,889.00	LF	15.00	15.00	100	2013	2013	3	96	56,002	
6	0810	CONCRETE A	0	0	10	10	100.00	SF	6.50	6.50	100	2013	2013	3	94	611	
7	0972	ST LGHT UN	0	0	0	0	12.00	UT	2,530.00	2,530.00	100	2013	2013	3	85	25,806	
8	0975	ST LT/ARM	0	0	0	0	13.00	UT	500.00	500.00	100	2013	2013	3	85	5,525	
9	0402	CONC BUMPE	0	0	0	0	3.00	UT	25.00	25.00	100	2013	2013	3	96	72	
10	0978	SECURTY LT	0	0	0	0	5.00	UT	450.00	450.00	100	2013	2013	3	85	1,913	

TOTAL OB/XF 221,775

LAND DESCRIPTION

LN	USE CODE	CLS	LAND USE DESCRIPTION	CAP	RD	LOC ZONE	FRONT	DEPTH	TOT LND UTS	UNIT TYPE	DT	DPTH FACT	% COND	TOT ADJ	UNIT PRICE	ADJ UNIT PRICE	LAND VALUE	OTHER ADJUSTMENTS AND NOTES	YEAR	DENSITY	DECL	FRZ	YR	CONSRV
1	001600	C	SH CTR COM	0	0004	CI	0.00	0.00	184,664.00	SF		1.00	1.00	0.80	12.00	9.60	1,772,774							
2	001000	C	COMMERCIAL	0		CI	0.00	0.00	10,050.00	SF		1.00	1.00	1.00	12.50	12.50	125,625							

REVIEW DATE 07/29/2024 BY KW Total Acres: 0.00 Total Land Value: 0 Market: 0 Agricultural: 0 Common: 0 PRINTED 08/06/2024 BY SYS

PT SEC 51-3N-27E IN OR 2041/53
(EX PT IN OR 2700/164)
ESMT IN OR 1670/1998

SHOPS OF YULEE LLC/
463155 SR 200 MAILBOX #12
YULEE, FL 32097

2024

51-3N-27-0000-0028-0000

BUILDING CHARACTERISTICS

ELEMENT	CD	CONSTRUCTION
Exterior Wall	15	CONC BLOCK 100
Roof Structur	10	STEEL FRME 100
Roof Cover	04	BUILT-UP 100
Interior Wall	05	DRYWALL 100
Interior Floo	03	CONC FINSH 70
Interior Floo	14	CARPET 30
Ceiling	01	FIN.SUSPD 100
Air Condition	03	CENTRAL 100
Heating Type	04	AIR DUCTED 100
Fixtures		14 100
Frame	05	STEEL 100
Story Height		15 100
RMS		8 100
Stories	1.	1. 100
Units		0 100
Occupancy	00	NONE 100
Quality	03	Quality Level 03
DOR CODE	1600	COMMUNITY SHOPPING
MAP NUM		MKT AREA 04
NEIGHBORHOOD/LOC	4051.00	

AREA TYPE	TOTAL GROSS AREA	PCT OF BASE	TOT ADJ AREA	SUBAREA MARKET VALUE
BAS	1,540	100	1,540	165,390
BAS	2,100	100	2,100	225,532
CAN	210	30	63	6,766
PTO	102	5	5	537
SFB	700	80	560	60,142
TOTALS	4,652		4,268	458,368

MARKET ADJUSTMENTS

TYPE	MDL	EFF. AREA	TOT ADJ PTS	EFF. BASE RATE	REPL. COST NEW	AYB	EYB	ECON	FNCT		NORM	% COND
1602	04	4,268	113.6265	121.01	516,471	2014	2014	0	0	0	11.25	88.75

2 NBHD SHOP – 0% - 0 Heated Area: 4200 HX Base Yr

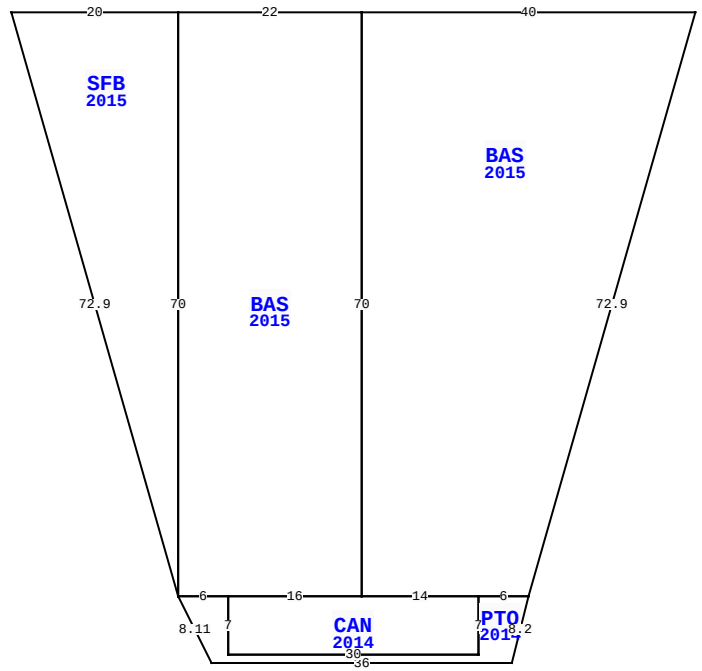

463155 SR 200, YULEE

BLD DATE	07/29/2024	KW	LGL DATE		
XF DATE	07/29/2024	KW	LAND DATE	06/16/2022	KK
INC DATE			AG DATE		

NASSAU COUNTY PROPERTY

PAGE 2 of 3 4

VALUATION SUMMARY

VALUATION BY	DIRECT_CAP
Tax Group: 4	Tax Dist:
BUILDING MARKET VALUE	3,194,224
TOTAL MARKET OB/XF VALUE	0
TOTAL LAND VALUE - MARKET	0
TOTAL MARKET VALUE	3,194,224
SOH/AGL Deduction	300,649
ASSESSED VALUE	2,893,575
TOTAL EXEMPTION VALUE	0
BASE TAXABLE VALUE	2,893,575
TOTAL JUST VALUE	3,194,224
NCON VALUE	0
INCOME VALUE	3,194,224
PREVIOUS YEAR MKT VALUE	3,319,849

PERMIT NUM	DESCRIPTION	AMT	ISSUED
C1429196	INTERIOR STE 7	45,865	02/09/2016
C1429197	CO ISSUED	74,455	06/25/2015
C1530273	CO ISSUED	179,056	06/05/2015
M1521209	SATILLA BOARD SPO	0	05/01/2015
B1530272	STE 10	120,719	04/01/2015
B1530273	SATILLA BOARD SPO	179,056	04/01/2015

SALES DATA

OFF RECORD Number	DATE	TYPE INST	Q / U	V / I	RSN CD	SALE PRICE
2041/0053	4/19/2016	SW	U	I	11	100
GRANTOR: SHOPS OF YULEE LLC						
GRANTEE: SHOPS OF YULEE LLC						
1403/1905	4/13/2006	TD	Q	I		1,675,000
GRANTOR: HANCE ANN CREWS TRUST						
GRANTEE: SHOPS OF YULEE LLC						

BUILDING NOTES

EXTRA FEATURES

LN	OB/XF CODE	DESCRIPTION	BLD	CAP	L	W	UNITS	UT	Adj R	ADJ UNIT PRICE	ORIG COND	YEAR ON	YEAR ACTUAL	Q	% COND	OB/XF MKT VALUE	NOTES
11	4950	BOLLARD	0	0	0	0	9.00	UT	100.00	100.00	100	2013	2013	3	100	900	
12	0443	STK FNC 6'	0	0	0	0	202.00	LF	10.00	10.00	100	2013	2013	3	60	1,212	
13	0811	CONCRETE B	0	0	0	0	551.00	SF	5.20	5.20	100	2014	2014	3	95	2,722	
14	0812	CONCRETE C	0	0	0	0	3,059.00	SF	4.00	4.00	100	2014	2014	3	95	11,624	
15	0141	BAR TOP L	0	0	0	0	16.00	LF	86.00	86.00	100	2014	2014	3	65	894	
16	0964	HALON SYST	0	0	16	4	64.00	SF	50.00	50.00	100	2014	2014	3	95	3,040	
17	0400	CONC CURB	0	0	0	0	384.00	LF	15.00	15.00	100	2014	2014	3	96	5,530	
18	0443	STK FNC 6'	0	0	0	0	28.00	LF	10.00	10.00	100	2014	2014	3	65	182	
19	0463	FENCE GATE	0	0	0	0	1.00	UT	300.00	300.00	100	2014	2014	3	87	261	
20	1123	CB 8"	0	0	0	0	226.00	SF	6.15	6.15	100	2014	2014	3	95	1,320	

BUILDING DIMENSIONS

BAS=[YR=2015;ORIG=0,0] W40 S70 E14 E6 U70R20 $
BAS=[YR=2015;ORIG=-40,0] W22 S70 E6 E16 N70 $
SFB=[YR=2015;ORIG=-62,0] W20 D70R20 N70 $
PTO=[YR=2014;ORIG=-62,70] D8R4 E36 U8R2 W6 S7 W30 N7 W6 $
CAN=[YR=2014;ORIG=-26,70] S7 W30 N7 E16 E14 $
.

LAND DESCRIPTION

TOTAL OB/XF 27,685

LN	USE CODE	CLS	LAND USE DESCRIPTION	CAP	RD	LOC ZONE	FRONT	DEPTH	TOT LND UTS	UNIT TYPE	DT	DPTH FACT	% COND	TOT ADJ	UNIT PRICE	ADJ UNIT PRICE	LAND VALUE	OTHER ADJUSTMENTS AND NOTES	YEAR	DENSITY	DECL	FRZ	YR	CONSRV

REVIEW DATE 07/29/2024 BY KW Total Acres: 0.00 Total Land Value: 0 Market: 0 Agricultural: 0 Common: 0 PRINTED 08/06/2024 BY SYS

PT SEC 51-3N-27E IN OR 2041/53
(EX PT IN OR 2700/164)
ESMT IN OR 1670/1998

SHOPS OF YULEE LLC/
463155 SR 200 MAILBOX #12
YULEE, FL 32097

2024

51-3N-27-0000-0028-0000

BUILDING CHARACTERISTICS

ELEMENT	CD	CONSTRUCTION
Exterior Wall	15	CONC BLOCK 100
Roof Structur	10	STEEL FRME 100
Roof Cover	04	BUILT-UP 100
Interior Wall	05	DRYWALL 100
Interior Floo	14	CARPET 60
Interior Floo	03	CONC FINSH 40
Ceiling	02	F.NOT SUS 100
Air Condition	03	CENTRAL 100
Heating Type	04	AIR DUCTED 100
Fixtures		35 100
Frame	05	STEEL 100
Story Height		15 100
RMS		19 100
Stories	1.	1. 100
Units		0 100
Occupancy	00	NONE 100
Quality	03	Quality Level 03
DOR CODE	1600	COMMUNITY SHOPPING
MAP NUM		MKT AREA 04
NEIGHBORHOOD/LOC	4051.00	

AREA TYPE	TOTAL GROSS AREA	PCT OF BASE	TOT ADJ AREA	SUBAREA MARKET VALUE
BAS	490	100	490	51,089
BAS	700	100	700	72,984
BAS	840	100	840	87,581
BAS	980	100	980	102,178
BAS	1,330	100	1,330	138,670
BAS	1,400	100	1,400	145,969
BAS	1,890	100	1,890	197,058
BAS	2,360	100	2,360	246,062
CAN	210	30	63	6,568
PTO	878	5	44	4,587
TOTALS	11,098		10,105	1,053,582

MARKET ADJUSTMENTS

TYPE	MDL	EFF. AREA	TOT ADJ PTS	EFF. BASE RATE	REPL. COST NEW	AYB	EYB	ECON	FNCT		NORM	% COND
1602	04	10,105	110.3127	117.48	1,187,135	2014	2014	0	0	0	11.25	88.75

3 NBHD SHOP - 0% - 0 Heated Area: 9990 HX Base Yr

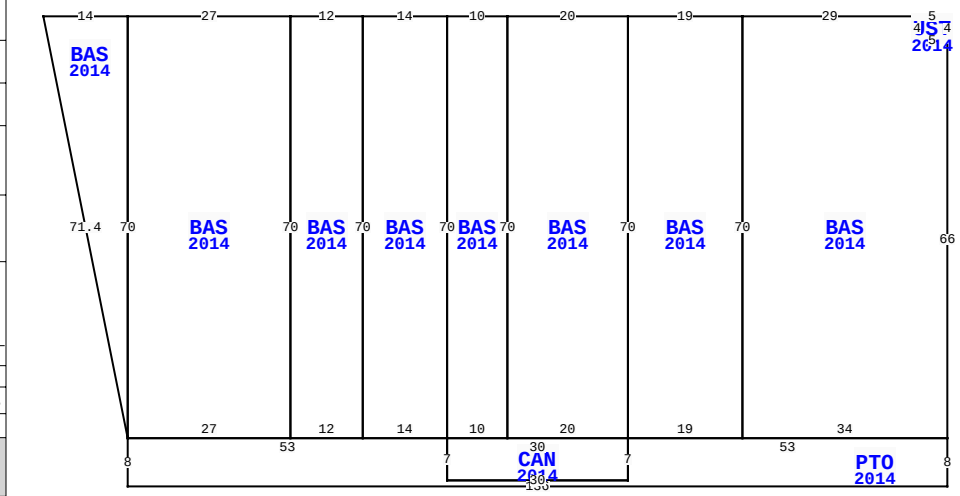

** This building has 11 Sub-Areas

463155 SR 200, YULEE

BLD DATE	07/29/2024	KW	LGL DATE	
XF DATE	07/29/2024	KW	LAND DATE	06/16/2022 KK
INC DATE			AG DATE	

NASSAU COUNTY PROPERTY

PAGE 3 of 3 4

VALUATION SUMMARY

VALUATION BY	DIRECT_CAP
Tax Group: 4	Tax Dist:
BUILDING MARKET VALUE	3,194,224
TOTAL MARKET OB/XF VALUE	0
TOTAL LAND VALUE - MARKET	0
TOTAL MARKET VALUE	3,194,224
SOH/AGL Deduction	300,649
ASSESSED VALUE	2,893,575
TOTAL EXEMPTION VALUE	0
BASE TAXABLE VALUE	2,893,575
TOTAL JUST VALUE	3,194,224
NCON VALUE	0
INCOME VALUE	3,194,224
PREVIOUS YEAR MKT VALUE	3,319,849

PERMIT NUM	DESCRIPTION	AMT	ISSUED
E1529085	STE 10	0	04/01/2015
E1529086	STE 11 & 12	0	04/01/2015
E1529105	SATILLA BOARD SPO	0	04/01/2015
E1528962	LYNN TODD KIDS RE	0	03/01/2015
E1528963	KIM SAGE KIDS ENT	0	03/01/2015
C1429195	CHINA KING STE 19	60,091	02/20/2015

SALES DATA

OFF RECORD Number	DATE	TYPE INST	Q / U	V / I	RSN CD	SALE PRICE
2041/0053	4/19/2016	SW	U	I	11	100
GRANTOR: SHOPS OF YULEE LLC						
GRANTEE: SHOPS OF YULEE LLC						
1403/1905	4/13/2006	TD	Q	I		1,675,000
GRANTOR: HANCE ANN CREWS TRUST						
GRANTEE: SHOPS OF YULEE LLC						

BUILDING NOTES

EXTRA FEATURES

LN	OB/XF CODE	DESCRIPTION	BLD	CAP	L	W	UNITS	UT	Adj R	ADJ UNIT PRICE	ORIG COND	YEAR ON	YEAR ACTUAL	Q	% COND	OB/XF MKT VALUE	NOTES
21	0810	CONCRETE A	0	0	13	10	130.00	SF	6.50	6.50	100	2014	2014	3	95	803	
22	0464	FNC GT 10'	0	0	0	0	1.00	UT	350.00	350.00	100	2014	2014	3	87	305	
23	0810	CONCRETE A	0	0	15	6	90.00	SF	6.50	6.50	100	2014	2014	3	95	556	
24	0978	SECURTY LT	0	0	0	0	9.00	UT	450.00	450.00	100	2014	2014	3	87	3,524	
25	0402	CONC BUMPE	0	0	0	0	23.00	UT	25.00	25.00	100	2014	2014	3	96	552	
26	0446	BOX FNC 6'	0	0	0	0	370.00	LF	20.00	20.00	100	2014	2014	3	65	4,810	
27	0464	FNC GT 10'	0	0	0	0	2.00	UT	350.00	350.00	100	2014	2014	3	87	609	
28	0463	FENCE GATE	0	0	0	0	2.00	UT	300.00	300.00	100	2014	2014	3	87	522	
29	0811	CONCRETE B	0	0	0	0	633.00	SF	5.20	5.20	100	2014	2014	3	95	3,127	
30	0446	BOX FNC 6'	0	0	0	0	107.00	LF	20.00	20.00	100	2015	2015	3	70	1,498	

TOTAL OB/XF 16,306

BUILDING DIMENSIONS

BAS=[YR=2014;ORIG=-5,0] W29 S70 E34 N66 W5 N4 $
BAS=[YR=2014;ORIG=-109,0] W27 S70 E27 N70 $
BAS=[YR=2014;ORIG=-53,0] W20 S70 E20 N70 $
BAS=[YR=2014;ORIG=-34,0] W19 S70 E19 N70 $
PTO=[YR=2014;ORIG=-136,70] S8 E136 N8 W53 S7 W30 N7 W53 $
BAS=[YR=2014;ORIG=-83,0] W14 S70 E14 N70 $
BAS=[YR=2014;ORIG=-97,0] W12 S70 E12 N70 $
BAS=[YR=2014;ORIG=-73,0] W10 S70 E10 N70 $
BAS=[YR=2014;ORIG=-136,0] W14 D70R14 N70 $
CAN=[YR=2014;ORIG=-53,70] S7 W30 N7 E30 $
UST=[YR=2014;ORIG=0,0] W5 S4 E5 N4 $
.

LAND DESCRIPTION

LN	USE CODE	CLS	LAND USE DESCRIPTION	CAP	RD	LOC ZONE	FRONT	DEPTH	TOT LND UTS	UNIT TYPE	DT	DPTH FACT	% COND	TOT ADJ	UNIT PRICE	ADJ UNIT PRICE	LAND VALUE	OTHER ADJUSTMENTS AND NOTES	YEAR	DENSITY	DECL	FRZ	YR	CONSRV

REVIEW DATE 07/29/2024 BY KW Total Acres: 0.00 Total Land Value: 0 Market: 0 Agricultural: 0 Common: 0 PRINTED 08/06/2024 BY SYS