LOT 16
IN OR 1927/821
GLENWOOD S/D R/P DBK 199/409

BROOKS JOHN & REBECCA S
96109 CEDAR AV
YULEE, FL 32097

2024

50-3N-28-5280-0016-0040

BUILDING CHARACTERISTICS

ELEMENT	CD	CONSTRUCTION
Exterior Wall	16	WD FR STUC 100
Roof Structur	08	IRREGULAR 100
Roof Cover	03	COMP SHNGL 100
Interior Wall	05	DRYWALL 100
Interior Floo	12	HARDWOOD 80
Interior Floo	11	CLAY TILE 20
Air Condition	03	CENTRAL 100
Heating Type	04	AIR DUCTED 100
Bedrooms		4 100
Bathrooms		3 100
Frame	02	WOOD FRAME 100
Stories	1.5	1.5 100
Units		0 100
BUD8 Adjustme	04	DIST 01 100
Occupancy	00	NONE 100
Quality	03	Quality Level 03
DOR CODE	0100	SINGLE FAMILY
MAP NUM		MKT AREA 04
NEIGHBORHOOD/LOC	4029.00	

AREA TYPE	TOTAL GROSS AREA	PCT OF BASE	TOT ADJ AREA	SUBAREA MARKET VALUE
BAS	1,024	100	1,024	118,085
BAS	640	100	640	73,803
BAS	96	100	96	11,071
BAS	330	100	330	38,055
FGR	552	55	304	35,056
FOP	49	30	15	1,729
FOP	240	30	72	8,302
FUS	667	100	667	76,917
TOTALS	3,598		3,148	363,019

MARKET ADJUSTMENTS

TYPE	MDL	EFF. AREA	TOT ADJ PTS	EFF. BASE RATE	REPL. COST NEW	AYB	EYB	ECON	FNCT		NORM	% COND
0900	01	3,148	107.2720	134.09	422,115	1962	1995	0	0	0	14.00	86.00

1 SNGL FAM – 100% - 2015 Heated Area: 2757 HX Base Yr 2015

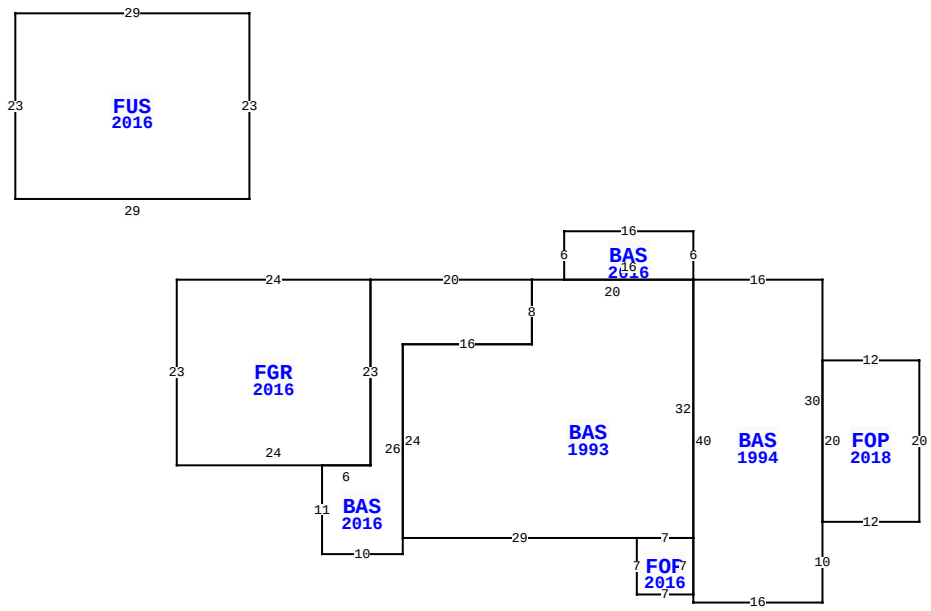

96109 CEDAR AV, YULEE

BLD DATE		LGL DATE	
XF DATE		LAND DATE	
INC DATE		AG DATE	

NASSAU COUNTY PROPERTY

PAGE 1 of 1 4

VALUATION SUMMARY

VALUATION BY		STANDARD
Tax Group: 4	Tax Dist:	
BUILDING MARKET VALUE		363,019
TOTAL MARKET OB/XF VALUE		46,834
TOTAL LAND VALUE - MARKET		254,000
TOTAL MARKET VALUE		663,853
SOH/AGL Deduction		224,100
ASSESSED VALUE		439,753
TOTAL EXEMPTION VALUE	HX HB	50,000
BASE TAXABLE VALUE		389,753
TOTAL JUST VALUE		663,853
NCON VALUE		0
INCOME VALUE		
PREVIOUS YEAR MKT VALUE		649,740

PERMIT NUM	DESCRIPTION	AMT	ISSUED
B1531134	CO ISSUED	0	06/13/2016
B1531134	ADDITION	121,291	09/01/2015
94-0844	ADDITION	0	03/01/1994

SALES DATA

OFF RECORD Number	DATE	TYPE INST	Q / U	V / I	RSN CD	SALE PRICE
1927/0821	6/30/2014	WD	U	I	11	100
GRANTOR: CHENOWETH STEVEN T &						
GRANTEE: BROOKS JOHN & REBEC						
1925/0776	6/30/2014	WD	Q	I	01	327,500
GRANTOR: CHENOWETH STEVEN T &						
GRANTEE: BROOKS JOHN & REBEC						

BUILDING NOTES

BUILDING DIMENSIONS

BAS=[YR=1994] W16 BAS=[YR=2016] N6 W16 S6 E16$ BAS=[YR=1993] W20 BAS=[YR=2016] W20 FGR=[YR=2016] W24 S23 E24 N23$ S23 W6 S11 E10 N26 E16 N8$ S8 W16 S24 E29 FOP=[YR=2016] S7 E7 N7 W7$ E7 N32$ S40 E16 N10 FOP=[YR=2018] E12 N20 W12 S20$ N30$ PTR= N10 W100 FUS=[YR=2016] N23 E29 S23 W29$ E100 S10$.

EXTRA FEATURES

LN	OB/XF CODE	DESCRIPTION	BLD	CAP	L	W	UNITS	UT	Adj R	ADJ UNIT PRICE	ORIG COND	YEAR ON	YEAR ACTUAL	Q	% COND	OB/XF MKT VALUE	NOTES
1	0510	GARAGE WD-	0	100	24	32	768.00	SF	35.00	35.00	100	1991	1991	3	20	5,376	
2	0810	CONCRETE A	0	100	55	17	935.00	SF	6.50	6.50	100	1994	1994	3	68	4,133	
3	0300	BOAT DCK W	0	100	0	0	975.00	SF	40.00	40.00	100	2000	2000	3	28	10,920	
4	0303	FLT DOCK W	0	100	10	24	240.00	SF	26.00	26.00	100	2000	2000	3	28	1,747	
5	0310	AL GANG WY	0	100	0	0	20.00	LF	115.00	115.00	100	2000	2000	3	20	460	
6	0322	BOAT LFT L	0	100	0	0	1.00	UT	1,500.00	1,500.00	100	2000	2000	3	20	300	
7	0920	CWALL-WD/M	0	100	0	0	60.00	LF	390.00	390.00	100	2010	2010	3	45	10,530	
8	0810	CONCRETE A	0	100	0	0	435.00	SF	6.50	6.50	100	2016	2016	3	96	2,714	
9	0812	CONCRETE C	0	100	0	0	2,423.00	SF	4.00	4.00	100	2016	2016	3	96	9,304	
10	0317	DCK PLNG W	0	100	0	0	3.00	UT	1,000.00	1,000.00	100	2010	2010	3	45	1,350	

TOTAL OB/XF 46,834

LAND DESCRIPTION

LN	USE CODE	CLS	LAND USE DESCRIPTION	CAP	RD	LOC ZONE	FRONT	DEPTH	TOT LND UTS	UNIT TYPE	DT	DPTH FACT	% COND	TOT ADJ	UNIT PRICE	ADJ UNIT PRICE	LAND VALUE	OTHER ADJUSTMENTS AND NOTES	YEAR	DENSITY	DECL	FRZ	YR	CONSRV
1	000130	C	SFR WATER	100	0008	RSF-1	0.00	0.00	1.27	AC		1.00	1.00	1.00	200,000.00	200,000.00	254,000							

REVIEW DATE 05/12/2019 BY KBA Total Acres: 1.27 Total Land Value: 254,000 Market: 0 Agricultural: 0 Common: 254,000 PRINTED 08/06/2024 BY SYS