LOT 9 & PT OF LOT 4 IN
IN OR 1910/1463
GLENWOOD S/D R/P DBK 199/409

BURCH WILLIAM MICHAEL SR
96152 GLENWOOD RD
YULEE, FL 32097

2024

50-3N-28-5280-0004-0000

BUILDING CHARACTERISTICS

ELEMENT	CD	CONSTRUCTION
Exterior Wall	10	ABOVE AVG 50
Exterior Wall	17	CB STUCCO 50
Roof Structur	08	IRREGULAR 100
Roof Cover	13	STAND SEAM 100
Interior Wall	05	DRYWALL 100
Interior Floo	12	HARDWOOD 70
Interior Floo	13	LVT/LAMNT 30
Air Condition	03	CENTRAL 100
Heating Type	04	AIR DUCTED 100
Bedrooms		4 100
Bathrooms		4.5 100
Frame	03	MASONRY 100
Stories	3.	3. 100
Units		0 100
Quality	04	Quality Level 04

DOR CODE	0100	SINGLE FAMILY	
MAP NUM		MKT AREA	04
NEIGHBORHOOD/LOC	4029.00		

AREA TYPE	TOTAL GROSS AREA	PCT OF BASE	TOT ADJ AREA	SUBAREA MARKET VALUE
BAS	1,968	100	1,968	434,993
FGR	417	55	229	50,616
FGR	460	55	253	55,921
FOP	110	30	33	7,294
FOP	256	30	77	17,020
FOP	356	30	107	23,651
FOP	932	30	280	61,890
FOP	960	30	288	63,657
FST	15	55	8	1,769
FST	28	55	15	3,316
TOTALS	10,434		7,443	1,645,149

MARKET ADJUSTMENTS

TYPE	MDL	EFF. AREA	TOT ADJ PTS	EFF. BASE RATE	REPL. COST NEW	AYB	EYB	ECON	FNCT		NORM	% COND
0500	11	7,443	149.9784	224.97	1,674,452	2019	2019	0	0	0	1.75	98.25

1 SFR CUST – 100% - 2020 Heated Area: 6030 HX Base Yr 2020

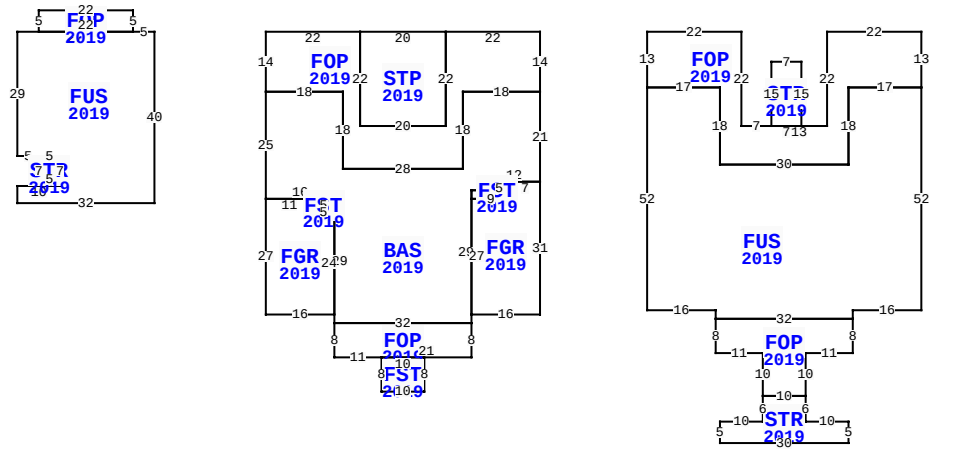

** This building has 17 Sub-Areas

96152 GLENWOOD RD, YULEE

BLD DATE		LGL DATE	
XF DATE		LAND DATE	
INC DATE		AG DATE	

NASSAU COUNTY PROPERTY

PAGE 1 of 2 4

VALUATION SUMMARY

VALUATION BY		STANDARD
Tax Group: 4	Tax Dist:	
BUILDING MARKET VALUE		1,703,576
TOTAL MARKET OB/XF VALUE		177,917
TOTAL LAND VALUE - MARKET		316,000
TOTAL MARKET VALUE		2,197,493
SOH/AGL Deduction		703,926
ASSESSED VALUE		1,493,567
TOTAL EXEMPTION VALUE	HX HB	50,000
BASE TAXABLE VALUE		1,443,567
TOTAL JUST VALUE		2,197,493
NCON VALUE		0
INCOME VALUE		
PREVIOUS YEAR MKT VALUE		2,130,223

PERMIT NUM	DESCRIPTION	AMT	ISSUED
C1807090	CO ISSUED	0	07/10/2019
B1811966	SWIM POOL	55,425	12/06/2018
B1807090	NEW CONSTR	820,596	07/12/2018
B1708935	GARAGE	32,472	10/10/2017
324551	DOCK	0	02/25/2014
B017891	NEW CONSTR	397,000	01/01/2001

SALES DATA

OFF RECORD Number	DATE	TYPE INST	Q U	V I	RSN CD	SALE PRICE
1910/1463	4/04/2014	WD	Q	I	01	735,000
GRANTOR: CHESTER GEORGE A JR &						
GRANTEE: BURCH WILLIAM MICHA						
0851/1840	10/12/1998	WD	Q	V		118,000
GRANTOR: ESTES WILLIAM W & BAR						
GRANTEE: CHESTER GEORGE JR &						

BUILDING NOTES

BUILDING DIMENSIONS

FOP=[YR=2019] W22 STP=[YR=2019] W20 S22 E20 N22$ S22 W20 N22 W22 S14 BAS=[YR=2019] S25 FGR=[YR=2019] S27 E16 N24 FST=[YR=2019] N3 W5 S3 E5$ W5 N3 W11$ E16 S29 FOP=[YR=2019] S8 E11 FST=[YR=2019] S8 E10 N8 W10$ E21 N8 W32$ E32 N2 FGR=[YR=2019] E16 N31 W7 FST=[YR=2019] W5 S2 W4 S2 E9 N4$ S4 W9 S27$ N29 E4 N2 E12 N21 W18 S18 W28 N18 W18$ E18 S18 E28 N18 E18 N14$ PTR= E25 FOP=[YR=2019] E22 S22 E7 STR=[YR=2019] N15 E7 S15 W7$ E13 N22 E22 S13 FUS=[YR=2019] S52 W16 S2 FOP=[YR=2019] S8 W11 S10 STR=[YR=2019] S6 E10 S5 W30 N5 E10 N6 E10$ W10 N10 W11 N8 E32$ W32 N2 W16 N52 E17 S18 E30 N18 E17$ W17 S18 W30 N18 W17 N13$ W25$ PTR= W90 FUS=[YR=2019] W5 FOP=[YR=2019] N5 W22 S5 E22$ W27 S29 E5 STR=[YR=2019] S7 E5

EXTRA FEATURES

L N	OB/XF CODE	DESCRIPTION	BLD	CAP	L	W	UNITS	UT	Adj R	ADJ UNIT PRICE	ORIG COND	YEAR ON	YEAR ACTUAL	Q	% COND	OB/XF MKT VALUE	NOTES
1	0504	FP-ELECTRI	0	100	0	0	1.00	UT	2,000.00	2,000.00	100	2019	2019	3	99	1,980	
2	0300	BOAT DCK W	0	100	0	0	1,156.00	SF	40.00	40.00	100	2014	2014	3	75	34,680	
3	0920	CWALL-WD/M	0	100	0	0	85.00	LF	390.00	390.00	100	2014	2014	3	65	21,548	
4	0463	FENCE GATE	0	100	0	0	2.00	UT	600.00	600.00	100	2001	2001	3	55	660	
5	0350	CARPORT WD	0	100	0	0	912.00	SF	13.00	13.00	100	2014	2014	3	65	7,706	
6	0323	BOAT LFT H	0	100	0	0	1.00	UT	2,500.00	2,500.00	100	2014	2014	3	65	1,625	
7	0310	AL GANG WY	0	100	0	0	20.00	LF	115.00	115.00	100	2014	2014	3	65	1,495	
8	0303	FLT DOCK W	0	100	20	20	400.00	SF	26.00	26.00	100	2014	2014	3	75	7,800	
9	0811	CONCRETE B	0	100	20	38	760.00	SF	5.20	5.20	100	2018	2018	3	97	3,833	
10	0812	CONCRETE C	0	100	345	12	4,140.00	SF	4.00	4.00	100	2018	2018	3	97	16,063	

TOTAL OB/XF 97,390

LAND DESCRIPTION

L N	USE CODE	CLS	LAND USE DESCRIPTION	CAP	R D	LOC ZONE	FRONT	DEPTH	TOT LND UTS	UNIT TYPE	D T	DPTH FACT	% COND	TOT ADJ	UNIT PRICE	ADJ UNIT PRICE	LAND VALUE	OTHER ADJUSTMENTS AND NOTES	YEAR	DENSITY	DECL	FRZ	YR	CONSRV
1	000130	C	SFR WATER	100	0008	RSF-1	95.00	700.00	1.58	AC		1.00	1.00	1.00	200,000.00	200,000.00	316,000							

REVIEW DATE 07/17/2019 BY KW Total Acres: 1.58 Total Land Value: 316,000 Market: 0 Agricultural: 0 Common: 316,000 PRINTED 08/06/2024 BY SYS

LOT 9 & PT OF LOT 4 IN
IN OR 1910/1463
GLENWOOD S/D R/P DBK 199/409

BURCH WILLIAM MICHAEL SR
96152 GLENWOOD RD
YULEE, FL 32097

2024

50-3N-28-5280-0004-0000

NASSAU COUNTY PROPERTY

BUILDING CHARACTERISTICS

ELEMENT	CD	CONSTRUCTION
Exterior Wall	12	CEDAR 100
Roof Structur	03	GABLE/HIP 100
Roof Cover	12	MODULAR MT 100
Interior Wall	02	WALL BD/WD 80
Interior Wall	05	DRYWALL 20
Interior Floo	03	CONC FINSH 100
Air Condition	03	CENTRAL 100
Heating Type	04	AIR DUCTED 100
Bedrooms		0 100
Bathrooms		1 100
Frame	02	WOOD FRAME 100
Stories	1.	1. 100
Units		0 100
Quality	03	Quality Level 03
DOR CODE	0100	SINGLE FAMILY
MAP NUM		MKT AREA 04
NEIGHBORHOOD/LOC	4029.00	

AREA TYPE	TOTAL GROSS AREA	PCT OF BASE	TOT ADJ AREA	SUBAREA MARKET VALUE
BAS	1,440	100	1,440	58,427
TOTALS	1,440		1,440	58,427

MARKET ADJUSTMENTS

TYPE	MDL	EFF. AREA	TOT ADJ PTS	EFF. BASE RATE	REPL. COST NEW	AYB	EYB	ECON	FNCT		NORM	% COND
6500	11	1,440	122.0419	42.71	61,502	2018	2018	0	0	0	5.00	95.00

2 GARAGE RES – 100% - 2020 Heated Area: 1440 HX Base Yr 2020

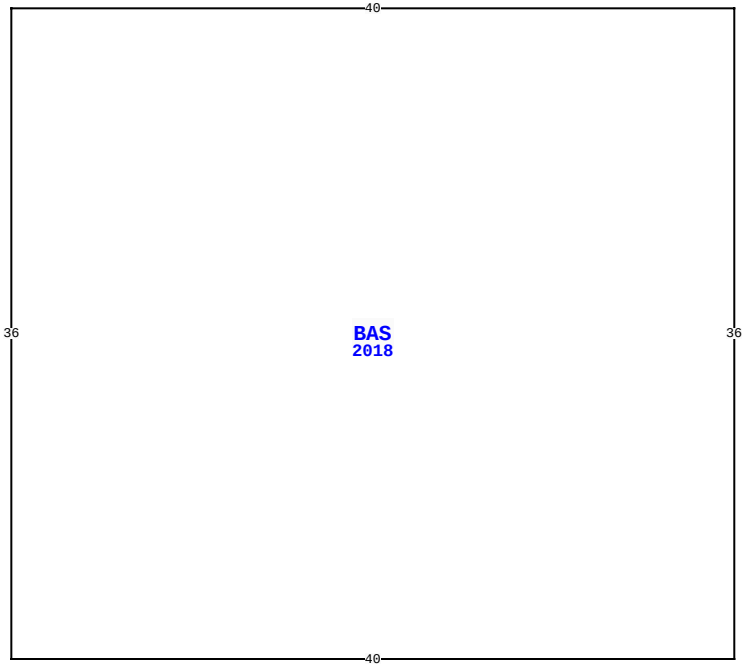

96152 GLENWOOD RD, YULEE

BLD DATE		LGL DATE	
XF DATE		LAND DATE	
INC DATE		AG DATE	

NASSAU COUNTY PROPERTY — VALUATION SUMMARY

VALUATION BY		STANDARD
Tax Group: 4	Tax Dist:	
BUILDING MARKET VALUE		1,703,576
TOTAL MARKET OB/XF VALUE		177,917
TOTAL LAND VALUE - MARKET		316,000
TOTAL MARKET VALUE		2,197,493
SOH/AGL Deduction		703,926
ASSESSED VALUE		1,493,567
TOTAL EXEMPTION VALUE	HX HB	50,000
BASE TAXABLE VALUE		1,443,567
TOTAL JUST VALUE		2,197,493
NCON VALUE		0
INCOME VALUE		
PREVIOUS YEAR MKT VALUE		2,130,223

PERMIT NUM	DESCRIPTION	AMT	ISSUED
B07769	FOUNDATION	15,000	11/01/2000

SALES DATA

OFF RECORD Number	DATE	TYPE INST	Q / U	V / I	RSN CD	SALE PRICE
1910/1463	4/04/2014	WD	Q	I	01	735,000
GRANTOR: CHESTER GEORGE A JR &						
GRANTEE: BURCH WILLIAM MICHA						
0851/1840	10/12/1998	WD	Q	V		118,000
GRANTOR: ESTES WILLIAM W & BAR						
GRANTEE: CHESTER GEORGE JR &						

BUILDING NOTES

BUILDING DIMENSIONS

BAS=[YR=2018] W40 S36 E40 N36$.

EXTRA FEATURES

LN	OB/XF CODE	DESCRIPTION	BLD	CAP	L	W	UNITS	UT	Adj R	ADJ UNIT PRICE	ORIG COND	YEAR ON	YEAR ACTUAL	Q	% COND	OB/XF MKT VALUE	NOTES
11	0812	CONCRETE C	0	100	0	0	3,788.00	SF	4.00	4.00	100	2019	2019	3	98	14,849	
12	0861	POOL GUNIT	0	100	0	0	667.00	SF	85.00	85.00	100	2019	2019	3	90	51,026	
13	0857	SANDSTONE/	0	100	0	0	925.00	SF	16.00	16.00	100	2019	2019	3	99	14,652	

LAND DESCRIPTION

TOTAL OB/XF 80,527

LN	USE CODE	CLS	LAND USE DESCRIPTION	CAP	RD	LOC ZONE	FRONT	DEPTH	TOT LND UTS	UNIT TYPE	DT	DPTH FACT	% COND	TOT ADJ	UNIT PRICE	ADJ UNIT PRICE	LAND VALUE	OTHER ADJUSTMENTS AND NOTES	YEAR	DENSITY	DECL	FRZ	YR	CONSRV

REVIEW DATE 07/17/2019 BY KW Total Acres: 1.58 Total Land Value: 316,000 Market: 0 Agricultural: 0 Common: 316,000 PRINTED 08/06/2024 BY SYS