LOT 63
BLACKROCK PARK PHASE 2
PBK 2243/170

SCOTT STEVEN CARTER
96716 QUARTZ LN
YULEE, FL 32097

2024

50-3N-28-0305-0063-0000

BUILDING CHARACTERISTICS

ELEMENT	CD	CONSTRUCTION
Exterior Wall	31	HARDIE BRD 100
Roof Structur	03	GABLE/HIP 100
Roof Cover	03	COMP SHNGL 100
Interior Wall	05	DRYWALL 100
Interior Floo	13	LVT/LAMNT 50
Interior Floo	14	CARPET 50
Air Condition	03	CENTRAL 100
Heating Type	04	AIR DUCTED 100
Bedrooms		4 100
Bathrooms		3.5 100
Frame	02	WOOD FRAME 100
Stories	2.	2. 100
Units		0 100
Occupancy	00	NONE 100
Quality	05	Quality Level 05

DOR CODE 0100 SINGLE FAMILY
MAP NUM
MKT AREA 04
NEIGHBORHOOD/LOC 4031.100

AREA TYPE	TOTAL GROSS AREA	PCT OF BASE	TOT ADJ AREA	SUBAREA MARKET VALUE
BAS	1,508	100	1,508	160,129
FGR	670	55	368	39,077
FOP	32	30	10	1,062
FOP	130	30	39	4,141
FUS	1,082	100	1,082	114,894
STR	39	10	4	425
TOTALS	3,461		3,011	319,727

MARKET ADJUSTMENTS

TYPE	MDL	EFF. AREA	TOT ADJ PTS	EFF. BASE RATE	REPL. COST NEW	AYB	EYB	ECON	FNCT		NORM	% COND
0100	01	3,011	112.3320	106.72	321,334	2021	2021	0	0	0	0.50	99.50

1 SINGLE FAM – 100% - 2022 Heated Area: 2590 HX Base Yr 2022

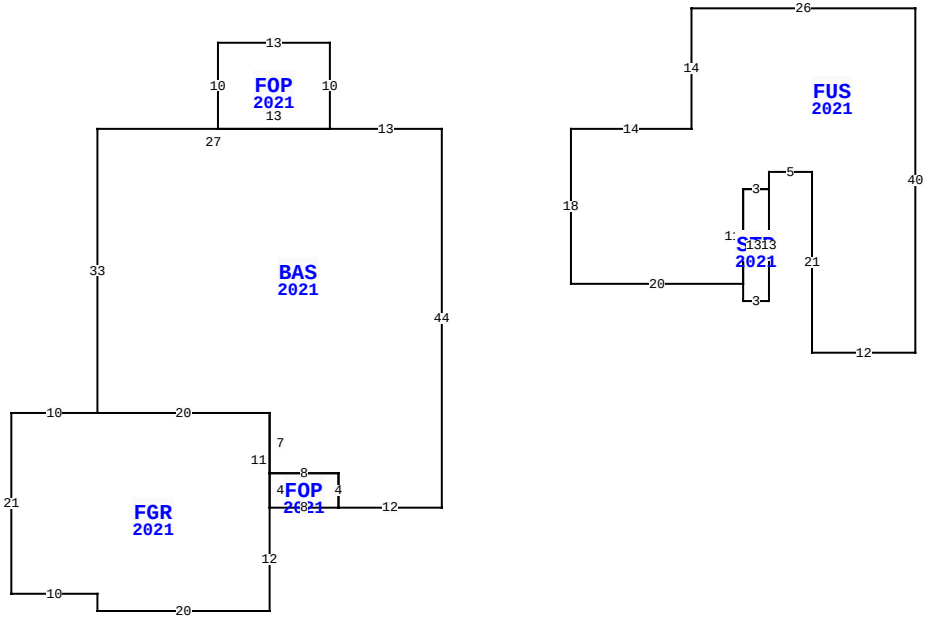

96716 QUARTZ LN, YULEE

BLD DATE	04/05/2023 NW	LGL DATE	
XF DATE		LAND DATE	04/09/2024 MLU
INC DATE		AG DATE	

NASSAU COUNTY PROPERTY

PAGE 1 of 1 4

VALUATION SUMMARY

VALUATION BY		STANDARD
Tax Group: 4	Tax Dist:	
BUILDING MARKET VALUE		319,727
TOTAL MARKET OB/XF VALUE		3,766
TOTAL LAND VALUE - MARKET		75,000
TOTAL MARKET VALUE		398,493
SOH/AGL Deduction		58,755
ASSESSED VALUE		339,738
TOTAL EXEMPTION VALUE	HX HB WR	55,000
BASE TAXABLE VALUE		284,738
TOTAL JUST VALUE		398,493
NCON VALUE		0
INCOME VALUE		
PREVIOUS YEAR MKT VALUE		341,298

PERMIT NUM	DESCRIPTION	AMT	ISSUED
C2013256	CO ISSUED	0	10/22/2021
B2013256	NEW CONSTR	357,296	01/06/2021

SALES DATA

OFF RECORD Number	DATE	TYPE INST	Q U	V I	RSN CD	SALE PRICE
2509/1763	10/22/2021	WD	Q	I	01	402,900
GRANTOR: NEW ATLANTIC BUILDERS						
GRANTEE: SCOTT STEVEN CARTER						
2509/1761	10/22/2021	WD	U	I	37	77,500
GRANTOR: W R HOWELL COMPANY						
GRANTEE: NEW ATLANTIC BUILDE						

BUILDING NOTES

BUILDING DIMENSIONS

BAS=[YR=2021] W13 FOP=[YR=2021] N10 W13 S10 E13$ W27 S33 FGR=[YR=2021] W10 S21 E10 S2 E20 N12 FOP=[YR=2021] E8 N4 W8 S4$ N11 W20$ E20 S7 E8 S4 E12 N44$ PTR= E15 FUS=[YR=2021] E14 N14 E26 S40 W12 N21 W5 S2 STR=[YR=2021] S13 W3 N13 E3$ W3 S11 W20 N18$ W15$.

EXTRA FEATURES

LN	OB/XF CODE	DESCRIPTION	BLD	CAP	L	W	UNITS	UT	Adj R	ADJ UNIT PRICE	ORIG COND	YEAR ON	YEAR ACTUAL	Q	% COND	OB/XF MKT VALUE	NOTES
1	0812	CONCRETE C	0	100	0	0	951.00	SF	4.00	4.00	100	2021	2021	3	99	3,766	

LAND DESCRIPTION

TOTAL OB/XF 3,766

LN	USE CODE	CLS	LAND USE DESCRIPTION	CAP	RD	LOC ZONE	FRONT	DEPTH	TOT LND UTS	UNIT TYPE	DT	DPTH FACT	% COND	TOT ADJ	UNIT PRICE	ADJ UNIT PRICE	LAND VALUE	OTHER ADJUSTMENTS AND NOTES	YEAR	DENSITY	DECL	FRZ	YR	CONSRV
1	000134	C	SFR POND	100		RSF-2	0.00	0.00	1.00	LT		1.00	1.00	1.00	75,000.00	75,000.00	75,000							

REVIEW DATE 12/07/2021 BY KW Total Acres: 0.00 Total Land Value: 75,000 Market: 0 Agricultural: 0 Common: 75,000 PRINTED 08/06/2024 BY SYS