LOT 55
BLACKROCK PARK PHASE 2
PBK 2243/170

ANDERSON ARVID & LESLIE
96915 SLATE COURT
YULEE, FL 32097

2024

50-3N-28-0305-0055-0000

NASSAU COUNTY PROPERTY

BUILDING CHARACTERISTICS

ELEMENT	CD	CONSTRUCTION
Exterior Wall	31	HARDIE BRD 100
Roof Structur	08	IRREGULAR 100
Roof Cover	03	COMP SHNGL 100
Interior Wall	05	DRYWALL 100
Interior Floo	13	LVT/LAMNT 90
Interior Floo	11	CLAY TILE 10
Air Condition	03	CENTRAL 100
Heating Type	04	AIR DUCTED 100
Bedrooms		5 100
Bathrooms		3.5 100
Frame	02	WOOD FRAME 100
Stories	2.	2. 100
Units		0 100
Occupancy	00	NONE 100
Quality	05	Quality Level 05

DOR CODE 0100 SINGLE FAMILY
MAP NUM | MKT AREA 04
NEIGHBORHOOD/LOC 4031.100

AREA TYPE	TOTAL GROSS AREA	PCT OF BASE	TOT ADJ AREA	SUBAREA MARKET VALUE
BAS	1,622	100	1,622	179,491
FGR	470	55	258	28,550
FOP	100	30	30	3,320
FSP	110	40	44	4,869
FST	160	55	88	9,738
FUS	975	100	975	107,894
PTO	44	5	2	221
STP	30	10	3	332
STR	52	10	5	553
TOTALS	3,563		3,027	334,968

MARKET ADJUSTMENTS

TYPE	MDL	EFF. AREA	TOT ADJ PTS	EFF. BASE RATE	REPL. COST NEW	AYB	EYB	ECON	FNCT		NORM	% COND
0100	01	3,027	116.4812	110.66	334,968	2022	2022	0	0	0	0.00	100.00

1 SINGLE FAM – 0% - 2023 Heated Area: 2597 HX Base Yr

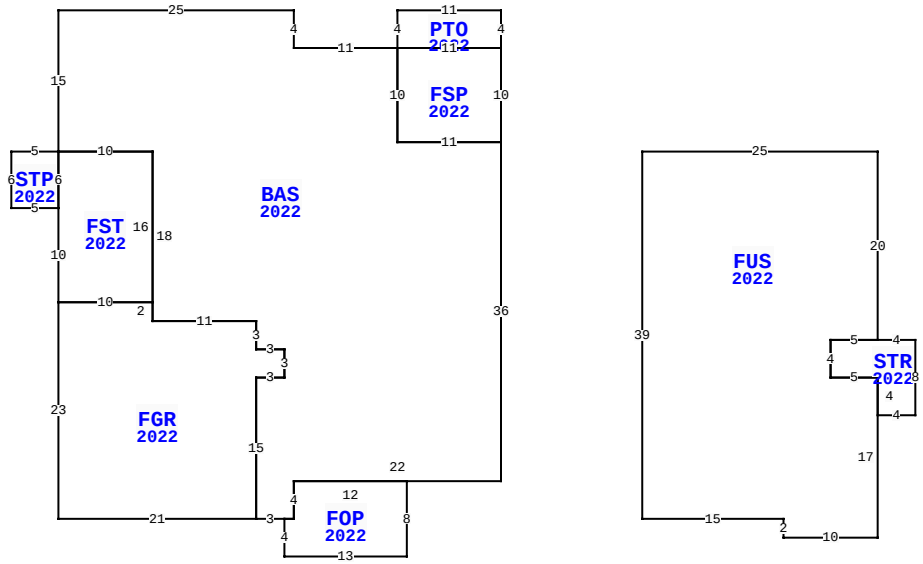

96915 SLATE CT, YULEE

BLD DATE	04/05/2023 NW	LGL DATE	
XF DATE		LAND DATE	04/09/2024 MLU
INC DATE		AG DATE	

VALUATION SUMMARY

VALUATION BY	STANDARD
Tax Group: 4	Tax Dist:
BUILDING MARKET VALUE	334,968
TOTAL MARKET OB/XF VALUE	4,040
TOTAL LAND VALUE - MARKET	75,000
TOTAL MARKET VALUE	414,008
SOH/AGL Deduction	25,345
ASSESSED VALUE	388,663
TOTAL EXEMPTION VALUE	0
BASE TAXABLE VALUE	388,663
TOTAL JUST VALUE	414,008
NCON VALUE	0
INCOME VALUE	
PREVIOUS YEAR MKT VALUE	353,330

PERMIT NUM	DESCRIPTION	AMT	ISSUED
C2106947	CO ISSUED	0	07/28/2022
B2106947	NEW CONSTR	389,447	05/27/2021

SALES DATA

OFF RECORD Number	DATE	TYPE INST	Q / U	V / I	RSN CD	SALE PRICE
2580/1904	7/26/2022	WD	Q	I	01	402,800
GRANTOR: NEW ATLANTIC BUILDERS						
GRANTEE: ANDERSON ARVID & LE						
2346/0596	3/05/2020	WD	Q	V	01	72,500
GRANTOR: BLACKROCK PARK LLP						
GRANTEE: NEW ATLANTIC BUILDE						

BUILDING NOTES

BUILDING DIMENSIONS

PTO=[YR=2022] W11 S4 BAS=[YR=2022] W11 N4 W25 S15
STP=[YR=2022] W5 S6 E5 FST=[YR=2022] S10 FGR=[YR=2022] S23
E21 N15 E3 N3 W3 N3 W11 N2 W10$ E10 N16 W10 S6$ N6$ E10 S18
E11 S3 E3 S3 W3 S15 E3 FOP=[YR=2022] S4 E13 N8 W12 S4 W1$ E1
N4 E22 N36 FSP=[YR=2022] N10 W11 S10 E11 $ W11 N10$ E11 N4$
PTR= E15 S15 FUS=[YR=2022] E25 S20 STR=[YR=2022] E4 S8 W4
N4 W5 N4 E5$ W5 S4 E5 S17 W10 N2 W15 N39$ N15 W15$.

EXTRA FEATURES

LN	OB/XF CODE	DESCRIPTION	BLD	CAP	L	W	UNITS	UT	Adj R	ADJ UNIT PRICE	ORIG COND	YEAR ON	YEAR ACTUAL	Q	% COND	OB/XF MKT VALUE	NOTES
1	0811	CONCRETE B	0	0	0	0	777.00	SF	5.20	5.20	100	2022	2022	3	100	4,040	

LAND DESCRIPTION

TOTAL OB/XF 4,040

LN	USE CODE	CLS	LAND USE DESCRIPTION	CAP	RD	LOC ZONE	FRONT	DEPTH	TOT LND UTS	UNIT TYPE	DT	DPTH FACT	% COND	TOT ADJ	UNIT PRICE	ADJ UNIT PRICE	LAND VALUE	OTHER ADJUSTMENTS AND NOTES	YEAR	DENSITY	DECL	FRZ	YR	CONSRV
1	000100	C	SFR	0		RSF-2	0.00	0.00	1.00	LT		1.00	1.00	1.00	75,000.00	75,000.00	75,000							

REVIEW DATE 07/28/2022 BY KW Total Acres: 0.00 Total Land Value: 75,000 Market: 0 Agricultural: 0 Common: 75,000 PRINTED 08/06/2024 BY SYS