LOT 23
BLACKROCK PARK PBK 8/175

WRIGHT CHRISTOPHER & MELISSA
96378 GRANITE TRAIL
YULEE, FL 32097

2024

50-3N-28-0305-0023-0000

BUILDING CHARACTERISTICS

ELEMENT	CD	CONSTRUCTION
Exterior Wall	31	HARDIE BRD 100
Roof Structur	03	GABLE/HIP 100
Roof Cover	03	COMP SHNGL 100
Interior Wall	05	DRYWALL 100
Interior Floo	13	LVT/LAMNT 90
Interior Floo	11	CLAY TILE 10
Air Condition	03	CENTRAL 100
Heating Type	04	AIR DUCTED 100
Bedrooms		3 100
Bathrooms		2 100
Frame	02	WOOD FRAME 100
Stories	1.	1. 100
Units		0 100
Quality	05	Quality Level 05

DOR CODE	0100	SINGLE FAMILY	
MAP NUM		MKT AREA	04
NEIGHBORHOOD/LOC	4031.100		

AREA TYPE	TOTAL GROSS AREA	PCT OF BASE	TOT ADJ AREA	SUBAREA MARKET VALUE
BAS	1,700	100	1,700	195,160
FGR	688	55	378	43,394
FOP	30	30	9	1,033
FOP	120	30	36	4,133
FST	24	55	13	1,492
TOTALS	2,562		2,136	245,213

MARKET ADJUSTMENTS

TYPE	MDL	EFF. AREA	TOT ADJ PTS	EFF. BASE RATE	REPL. COST NEW	AYB	EYB	ECON	FNCT		NORM	% COND
0100	01	2,136	120.8438	114.80	245,213	2023	2023	0	0	0	0.00	100.00

1 SINGLE FAM – 0% - 2024 Heated Area: 1700 HX Base Yr

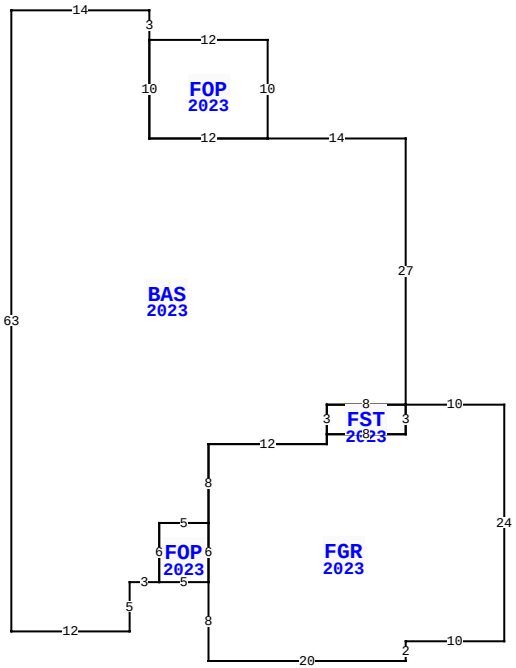

96378 GRANITE TR, YULEE

BLD DATE		LGL DATE	
XF DATE		LAND DATE	04/09/2024 MLU
INC DATE		AG DATE	

NASSAU COUNTY PROPERTY

PAGE 1 of 1 4

VALUATION SUMMARY

VALUATION BY	STANDARD
Tax Group: 4	Tax Dist:
BUILDING MARKET VALUE	245,213
TOTAL MARKET OB/XF VALUE	4,280
TOTAL LAND VALUE - MARKET	75,000
TOTAL MARKET VALUE	324,493
SOH/AGL Deduction	0
ASSESSED VALUE	324,493
TOTAL EXEMPTION VALUE	0
BASE TAXABLE VALUE	324,493
TOTAL JUST VALUE	324,493
NCON VALUE	249,493
INCOME VALUE	
PREVIOUS YEAR MKT VALUE	60,000

PERMIT NUM	DESCRIPTION	AMT	ISSUED
CO230005701			05/02/2023
22003078	NEW CONSTR	301,475	02/24/2022
F2114580	NEW CONSTR	298,733	10/22/2021

SALES DATA

OFF RECORD Number	DATE	TYPE INST	Q / U	V / I	RSN CD	SALE PRICE
2640/207	5/03/2023	WD	Q	I	01	383,000
GRANTOR: GRANITE TRAIL LAND TR						
GRANTEE: WRIGHT CHRISTOPHER						
2480/0025	7/15/2021	WD	Q	V	05	210,000
GRANTOR: ADVANTAGE HOME BUILDE						
GRANTEE: GRANITE TRAIL LAND						

BUILDING NOTES

BUILDING DIMENSIONS

BAS=[YR=2023;ORIG=-10,-20] W14 W12 N10 N3 W14 S63 E12 N5 E3 N6 E5 N8 E12 N1 N3 E8 N27 $
FOP=[YR=2023;ORIG=-36,-30] E12 S10 W12 N10 $
FST=[YR=2023;ORIG=-18,7] E8 S3 W8 N3 $
FGR=[YR=2023;ORIG=-30,11] E12 N1 E8 N3 E10 S24 W10 S2 W20 N8 N6 N8 $
FOP=[YR=2023;ORIG=-35,19] E5 S6 W5 N6 $
.

EXTRA FEATURES

LN	OB/XF CODE	DESCRIPTION	BLD	CAP	L	W	UNITS	UT	Adj R	ADJ UNIT PRICE	ORIG COND	YEAR ON	YEAR ACTUAL	Q	% COND	OB/XF MKT VALUE	NOTES
1	0812	CONCRETE C	0	0	0	0	1,070.00	SF	4.00	4.00	100	2023	2023		100	4,280	

LAND DESCRIPTION

TOTAL OB/XF 4,280

LN	USE CODE	CLS	LAND USE DESCRIPTION	CAP	RD	LOC ZONE	FRONT	DEPTH	TOT LND UTS	UNIT TYPE	DT	DPTH FACT	% COND	TOT ADJ	UNIT PRICE	ADJ UNIT PRICE	LAND VALUE	OTHER ADJUSTMENTS AND NOTES	YEAR	DENSITY	DECL	FRZ	YR	CONSRV
1	000100	C	SFR	0		RSF-2	0.00	0.00	1.00	LT		1.00	1.00	1.00	75,000.00	75,000.00	75,000							

REVIEW DATE 04/19/2023 BY DJ Total Acres: 0.00 Total Land Value: 75,000 Market: 0 Agricultural: 0 Common: 75,000 PRINTED 08/06/2024 BY SYS