LOT 10
BLACKROCK PARK PBK 8/175

ZOLLARS FRANK/GARCIA TONYA
96341 GRANITE TRL
YULEE, FL 32097

2024

50-3N-28-0305-0010-0000

BUILDING CHARACTERISTICS

ELEMENT	CD	CONSTRUCTION
Exterior Wall	31	HARDIE BRD 100
Roof Structur	03	GABLE/HIP 100
Roof Cover	03	COMP SHNGL 100
Interior Wall	05	DRYWALL 100
Interior Floo	13	LVT/LAMNT 70
Interior Floo	14	CARPET 30
Air Condition	03	CENTRAL 100
Heating Type	04	AIR DUCTED 100
Bedrooms		3 100
Bathrooms		2 100
Frame	02	WOOD FRAME 100
Stories	1.	1. 100
Units		0 100
Quality	05	Quality Level 05
DOR CODE	0100	SINGLE FAMILY
MAP NUM		MKT AREA 04
NEIGHBORHOOD/LOC	4031.100	

AREA TYPE	TOTAL GROSS AREA	PCT OF BASE	TOT ADJ AREA	SUBAREA MARKET VALUE
BAS	1,700	100	1,700	192,202
FGR	696	55	383	43,302
FOP	30	30	9	1,018
FOP	120	30	36	4,070
FST	16	55	9	1,018
TOTALS	2,562		2,137	241,609

MARKET ADJUSTMENTS

TYPE	MDL	EFF. AREA	TOT ADJ PTS	EFF. BASE RATE	REPL. COST NEW	AYB	EYB	ECON	FNCT		NORM	% COND
0100	01	2,137	119.0112	113.06	241,609	2023	2023	0	0	0	0.00	100.00

1 SINGLE FAM – 100% - 2024 Heated Area: 1700 HX Base Yr 2024

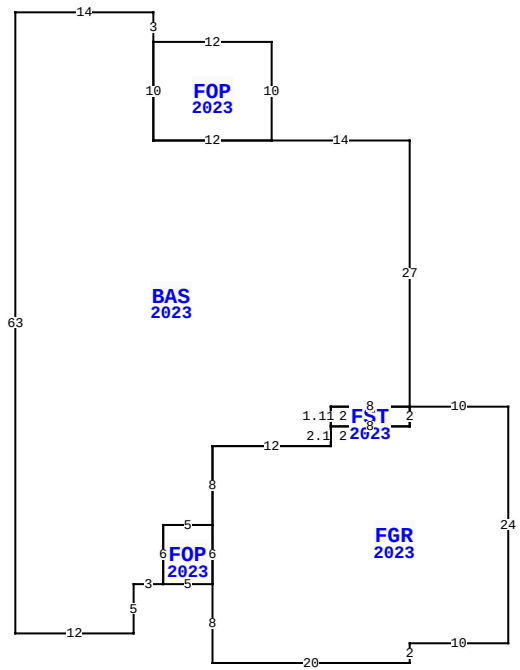

96341 GRANITE TR, YULEE

BLD DATE		LGL DATE	
XF DATE		LAND DATE	04/09/2024 MLU
INC DATE		AG DATE	

NASSAU COUNTY PROPERTY

PAGE 1 of 1 4

VALUATION SUMMARY

VALUATION BY		STANDARD
Tax Group: 4	Tax Dist:	
BUILDING MARKET VALUE		241,609
TOTAL MARKET OB/XF VALUE		8,099
TOTAL LAND VALUE - MARKET		75,000
TOTAL MARKET VALUE		324,708
SOH/AGL Deduction		88,191
ASSESSED VALUE		236,517
TOTAL EXEMPTION VALUE	HX HB DV	60,000
BASE TAXABLE VALUE		176,517
TOTAL JUST VALUE		324,708
NCON VALUE		249,708
INCOME VALUE		
PREVIOUS YEAR MKT VALUE		60,000

PERMIT NUM	DESCRIPTION	AMT	ISSUED
22003080	NEW CONSTR	301,475	02/24/2022

SALES DATA

OFF RECORD Number	DATE	TYPE INST	Q U	V I	RSN CD	SALE PRICE
2631/1687	4/11/2023	WD	Q	I	01	385,000
GRANTOR: GRANITE TRAIL LAND TR						
GRANTEE: ZOLLARS FRANK ET AL						
2480/0025	7/15/2021	WD	Q	V	05	210,000
GRANTOR: ADVANTAGE HOME BUILDE						
GRANTEE: GRANITE TRAIL LAND						

BUILDING NOTES

BUILDING DIMENSIONS

BAS=[YR=2023;ORIG=90,10] E14 S3 S10 E12 E14 S27 W8 S1.11 S2.1 W12 S8 W5 S6 W3 S5 W12 N63 $
FGR=[YR=2023;ORIG=110,54] E12 N2 E8 N2 E10 S24 W10 S2 W20 N8 N6 N8 $
FOP=[YR=2023;ORIG=104,13] E12 S10 W12 N10 $
FOP=[YR=2023;ORIG=110,62] S6 W5 N6 E5 $
FST=[YR=2023;ORIG=122,50] E8 S2 W8 N2 $
.

EXTRA FEATURES

LN	OB/XF CODE	DESCRIPTION	BLD	CAP	L	W	UNITS	UT	Adj R	ADJ UNIT PRICE	ORIG COND	YEAR ON	YEAR ACTUAL	Q	% COND	OB/XF MKT VALUE	NOTES
1	0811	CONCRETE B	0	100	0	0	1,036.00	SF	5.20	5.20	100	2023	2023		100	5,387	
2	0476	VF 6 SBPL	0	100	0	0	66.00	LF	32.00	32.00	100	2023	2023		100	2,112	
3	0470	VNYL GATE	0	100	0	0	2.00	UT	300.00	300.00	100	2023	2023		100	600	

LAND DESCRIPTION

TOTAL OB/XF 8,099

LN	USE CODE	CLS	LAND USE DESCRIPTION	CAP	RD	LOC ZONE	FRONT	DEPTH	TOT LND UTS	UNIT TYPE	DT	DPTH FACT	% COND	TOT ADJ	UNIT PRICE	ADJ UNIT PRICE	LAND VALUE	OTHER ADJUSTMENTS AND NOTES	YEAR	DENSITY	DECL	FRZ	YR	CONSRV
1	000100	C	SFR	100		RSF-2	0.00	0.00	1.00	LT		1.00	1.00	1.00	75,000.00	75,000.00	75,000							

REVIEW DATE 04/19/2023 BY DJ Total Acres: 0.00 Total Land Value: 75,000 Market: 0 Agricultural: 0 Common: 75,000 PRINTED 08/06/2024 BY SYS