LOT 33
BLACKROCK HAMMOCK PB 6/286

HARDWICK GLORIA Y REV LIV TRUST/HARDWICK GLORIA YO
96050 SOUTHERN PRIDE CT
YULEE, FL 32097

2024

50-3N-28-016B-0033-0000

BUILDING CHARACTERISTICS

ELEMENT	CD	CONSTRUCTION
Exterior Wall	16	WD FR STUC 100
Roof Structur	08	IRREGULAR 100
Roof Cover	03	COMP SHNGL 100
Interior Wall	05	DRYWALL 100
Interior Floo	11	CLAY TILE 100
Air Condition	03	CENTRAL 100
Heating Type	04	AIR DUCTED 100
Bedrooms		3 100
Bathrooms		2.5 100
Frame	02	WOOD FRAME 100
Stories	1.	1. 100
Units		0 100
Occupancy	00	NONE 100
Quality	01	Quality Level 01

DOR CODE 0100 SINGLE FAMILY
MAP NUM | MKT AREA 04
NEIGHBORHOOD/LOC 4028.00

AREA TYPE	TOTAL GROSS AREA	PCT OF BASE	TOT ADJ AREA	SUBAREA MARKET VALUE
BAS	2,407	100	2,407	470,046
FGR	690	55	380	74,207
FOP	154	30	46	8,983
FSP	927	40	371	72,450
TOTALS	4,178		3,204	625,686

MARKET ADJUSTMENTS

TYPE	MDL	EFF. AREA	TOT ADJ PTS	EFF. BASE RATE	REPL. COST NEW	AYB	EYB	ECON	FNCT		NORM	% COND
0500	11	3,204	133.5288	200.29	641,729	2018	2018	0	0	0	2.50	97.50

1 SFR CUST – 100% - 2019 Heated Area: 2407 HX Base Yr 2019

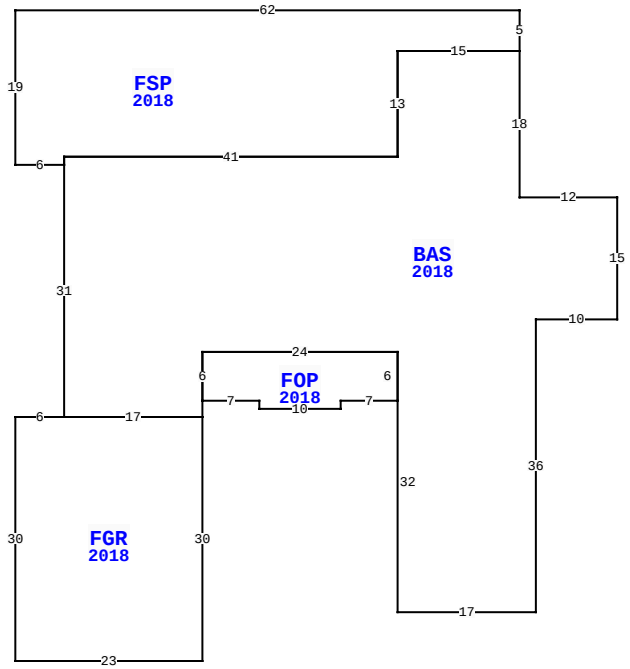

96050 SOUTHERN PRIDE CT, YULEE

BLD DATE	04/04/2023 NW	LGL DATE	
XF DATE		LAND DATE	
INC DATE		AG DATE	

NASSAU COUNTY PROPERTY

PAGE 1 of 1 4

VALUATION SUMMARY

VALUATION BY		STANDARD
Tax Group: 4	Tax Dist:	
BUILDING MARKET VALUE		625,686
TOTAL MARKET OB/XF VALUE		99,952
TOTAL LAND VALUE - MARKET		115,000
TOTAL MARKET VALUE		840,638
SOH/AGL Deduction		348,651
ASSESSED VALUE		491,987
TOTAL EXEMPTION VALUE	HX HB VX WX	60,000
BASE TAXABLE VALUE		431,987
TOTAL JUST VALUE		840,638
NCON VALUE		0
INCOME VALUE		
PREVIOUS YEAR MKT VALUE		673,109

PERMIT NUM	DESCRIPTION	AMT	ISSUED
B2105561	SCRN ENCL	15,000	05/03/2021
B2102572	SWIM POOL	40,000	03/04/2021
B1803147	CO ISSUED	0	11/19/2018
B1803147	NEW CONSTR	342,994	03/27/2018

SALES DATA

OFF RECORD Number	DATE	TYPE INST	Q U	V I	RSN CD	SALE PRICE
2409/0936	11/17/2020	QC	U	I	11	100
GRANTOR: HARDWICK GLORIA Y						
GRANTEE: HARDWICK GLORIA YOL						
2379/0147	7/28/2020	QC	U	I	11	100
GRANTOR: HARDWICK TRACY A & GL						
GRANTEE: HARDWICK GLORIA Y						

BUILDING NOTES

BUILDING DIMENSIONS

FSP=[YR=2018] W62 S19 E6 BAS=[YR=2018] S31 FGR=[YR=2018] W6 S30 E23 N30 W17$ E17 N2 FOP=[YR=2018] E7 S1 E10 N1 E7 N6 W24 S6$ N6 E24 S32 E17 N36 E10 N15 W12 N18 W15 S13 W41 S1$ N1 E41 N13 E15 N5$.

EXTRA FEATURES

LN	OB/XF CODE	DESCRIPTION	BLD	CAP	L	W	UNITS	UT	Adj R	ADJ UNIT PRICE	ORIG COND	YEAR ON	YEAR ACTUAL	Q	% COND	OB/XF MKT VALUE	NOTES
1	0500	FP-PRE FAB	0	100	0	0	1.00	UT	3,500.00	3,500.00	100	2018	2018	3	98	3,430	
2	0855	CONC PAVER	0	100	42	5	210.00	SF	10.00	10.00	100	2018	2018	3	97	2,037	
3	0855	CONC PAVER	0	100	43	3	129.00	SF	10.00	10.00	100	2018	2018	3	97	1,251	
4	0855	CONC PAVER	0	100	0	0	3,020.00	SF	10.00	10.00	100	2018	2018	3	97	29,294	
5	0855	CONC PAVER	0	100	16	16	256.00	SF	10.00	10.00	100	2018	2018	3	97	2,483	
6	0911	SCRN RM A	0	100	32	29	928.00	SF	21.88	21.88	100	2021	2021	3	93	18,879	
7	0861	POOL GUNIT	0	100	0	0	318.00	SF	85.00	85.00	100	2021	2021	3	95	25,679	
8	0871	POOL HTR R	0	100	0	0	1.00	UT	2,000.00	2,000.00	100	2021	2021	3	93	1,860	
9	0855	CONC PAVER	0	100	0	0	610.00	SF	10.00	10.00	100	2021	2021	3	99	6,039	
10	0600	SUMMER KIT	0	100	0	0	1.00	UT	10,000.00	10,000.00	100	2020	2020	3	90	9,000	

TOTAL OB/XF 99,952

LAND DESCRIPTION

LN	USE CODE	CLS	LAND USE DESCRIPTION	CAP	RD	LOC ZONE	FRONT	DEPTH	TOT LND UTS	UNIT TYPE	DT	DPTH FACT	% COND	TOT ADJ	UNIT PRICE	ADJ UNIT PRICE	LAND VALUE	OTHER ADJUSTMENTS AND NOTES	YEAR	DENSITY	DECL	FRZ	YR	CONSRV
1	000100	C	SFR	100		RSF-1	0.00	0.00	1.00	LT		1.00	1.00	1.00	115,000.00	115,000.00	115,000							

REVIEW DATE 12/16/2021 BY KW Total Acres: 0.00 Total Land Value: 115,000 Market: 0 Agricultural: 0 Common: 115,000 PRINTED 08/06/2024 BY SYS