LOT 17
BLACKROCK HAMMOCK PB 6/286

HOUSLEY GEORGE A JR & VICTORIA F
96349 SOUTHERN LILY DRIVE
YULEE, FL 32097

2024

50-3N-28-016B-0017-0000

NASSAU COUNTY PROPERTY

BUILDING CHARACTERISTICS

ELEMENT	CD	CONSTRUCTION
Exterior Wall	31	HARDIE BRD 100
Roof Structur	08	IRREGULAR 100
Roof Cover	03	COMP SHNGL 100
Interior Wall	05	DRYWALL 100
Interior Floo	13	LVT/LAMNT 70
Interior Floo	14	CARPET 30
Air Condition	03	CENTRAL 100
Heating Type	04	AIR DUCTED 100
Bedrooms		3 100
Bathrooms		4 100
Frame	02	WOOD FRAME 100
Stories	1.5	1.5 100
Units		0 100
Occupancy	00	NONE 100
Quality	01	Quality Level 01
DOR CODE	0100	SINGLE FAMILY
MAP NUM		MKT AREA 04
NEIGHBORHOOD/LOC	4028.00	

AREA TYPE	TOTAL GROSS AREA	PCT OF BASE	TOT ADJ AREA	SUBAREA MARKET VALUE
BAS	2,686	100	2,686	458,482
FGR	816	55	449	76,641
FOP	70	30	21	3,584
FOP	272	30	82	13,997
FSP	208	40	83	14,168
FUS	768	100	768	131,093
STR	48	10	5	853
TOTALS	4,868		4,094	698,819

MARKET ADJUSTMENTS

TYPE	MDL	EFF. AREA	TOT ADJ PTS	EFF. BASE RATE	REPL. COST NEW	AYB	EYB	ECON	FNCT		NORM	% COND
0500	11	4,094	116.7162	175.07	716,737	2017	2017	0	0	0	2.50	97.50

1 SFR CUST – 100% - 2021 Heated Area: 3454 HX Base Yr 2021

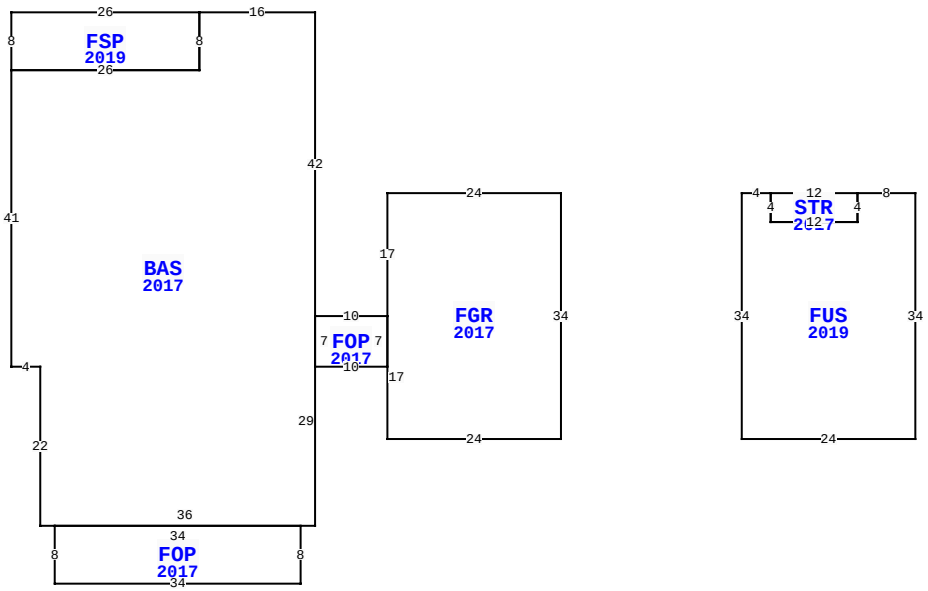

96349 SOUTHERN LILY DR, YULEE

BLD DATE	04/04/2023 NW	LGL DATE	
XF DATE		LAND DATE	
INC DATE		AG DATE	

VALUATION SUMMARY

VALUATION BY		STANDARD
Tax Group: 4	Tax Dist:	
BUILDING MARKET VALUE		698,819
TOTAL MARKET OB/XF VALUE		30,852
TOTAL LAND VALUE - MARKET		115,000
TOTAL MARKET VALUE		844,671
SOH/AGL Deduction		310,742
ASSESSED VALUE		533,929
TOTAL EXEMPTION VALUE	HX HB	50,000
BASE TAXABLE VALUE		483,929
TOTAL JUST VALUE		844,671
NCON VALUE		12,480
INCOME VALUE		
PREVIOUS YEAR MKT VALUE		642,310

PERMIT NUM	DESCRIPTION	AMT	ISSUED
B230005174	SCRN ENCL 416 SF	13,827	04/20/2023
C1703774	CO ISSUED	0	12/13/2017
B1703774	NEW CONSTR	445,560	04/27/2017

SALES DATA

OFF RECORD Number	DATE	TYPE INST	Q / U	V / I	RSN CD	SALE PRICE
2351/1713	3/31/2020	WD	Q	I	01	615,000
GRANTOR: NORTON DEAN						
GRANTEE: HOUSLEY GEORGE A JR						
2099/1404	1/30/2017	WD	Q	V	01	80,000
GRANTOR: BLACKROCK LAND TRUST						
GRANTEE: NORTON DEAN						

BUILDING NOTES

BUILDING DIMENSIONS

FGR=[YR=2017] W24 S17 FOP=[YR=2017] W10 BAS=[YR=2017] N42 W16 FSP=[YR=2019] W26 S8 E26 N8$ S8 W26 S41 E4 S22 E2 FOP=[YR=2017] S8 E34 N8 W34$ E36 N29$ S7 E10 N7$ S17 E24 N34$ PTR= E25 FUS=[YR=2019] E4 STR=[YR=2017] E12 S4 W12 N4$ S4 E12 N4 E8 S34 W24 N34$ W25$.

EXTRA FEATURES

LN	OB/XF CODE	DESCRIPTION	BLD	CAP	L	W	UNITS	UT	Adj R	ADJ UNIT PRICE	ORIG COND	YEAR ON	YEAR ACTUAL	Q	% COND	OB/XF MKT VALUE	NOTES
1	0855	CONC PAVER	0	100	28	3	84.00	SF	10.00	10.00	100	2017	2017	3	97	815	
2	0855	CONC PAVER	0	100	0	0	1,810.00	SF	10.00	10.00	100	2017	2017	3	97	17,557	
3	0912	SCRN RM G	1	100	0	0	416.00	SF	20.00	20.00	100	2024	2023		100	8,320	
4	0855	CONC PAVER	1	100	0	0	416.00	SF	10.00	10.00	100	2024	2023		100	4,160	

LAND DESCRIPTION

TOTAL OB/XF 30,852

LN	USE CODE	CLS	LAND USE DESCRIPTION	CAP	RD	LOC ZONE	FRONT	DEPTH	TOT LND UTS	UNIT TYPE	DT	DPTH FACT	% COND	TOT ADJ	UNIT PRICE	ADJ UNIT PRICE	LAND VALUE	OTHER ADJUSTMENTS AND NOTES	YEAR	DENSITY	DECL	FRZ	YR	CONSRV
1	000100	C	SFR	100		RSF-1	0.00	0.00	1.00	LT		1.00	1.00	1.00	115,000.00	115,000.00	115,000							

REVIEW DATE 06/26/2023 BY DJ Total Acres: 0.00 Total Land Value: 115,000 Market: 0 Agricultural: 0 Common: 115,000 PRINTED 08/06/2024 BY SYS