PT OF THE WILLIAM CHRISTOPHER
IN SEC 50-3N-28E
IN OR 2021/1788

WDC CORPORATION
ATTN: GENERAL COUNSEL, 225 COREY CENTER
ATLANTA, GA 30312

2024

50-3N-28-0000-0045-0000

NASSAU COUNTY PROPERTY

BUILDING CHARACTERISTICS

ELEMENT	CD	CONSTRUCTION
Exterior Wall	12	CEDAR 100
Roof Structur	07	GAMBREL 100
Roof Cover	12	MODULAR MT 100
Interior Wall	05	DRYWALL 100
Interior Floo	14	CARPET 70
Interior Floo	11	CLAY TILE 30
Air Condition	03	CENTRAL 100
Heating Type	04	AIR DUCTED 100
Bedrooms		2 100
Bathrooms		2 100
Frame	02	WOOD FRAME 100
Stories	3.	3. 100
Units		0 100
BUD8 Adjustme	04	DIST 01 100
Occupancy	00	NONE 100
Quality	03	Quality Level 03
DOR CODE	0100	SINGLE FAMILY
MAP NUM		MKT AREA 04
NEIGHBORHOOD/LOC	4031.00	

AREA TYPE	TOTAL GROSS AREA	PCT OF BASE	TOT ADJ AREA	SUBAREA MARKET VALUE
BAS	1,252	100	1,252	106,501
FUS	525	100	525	44,659
UOP	196	20	39	3,318
UOP	528	20	106	9,017
UST	1,150	45	518	44,063
TOTALS	3,651		2,440	207,556

MARKET ADJUSTMENTS

TYPE	MDL	EFF. AREA	TOT ADJ PTS	EFF. BASE RATE	REPL. COST NEW	AYB	EYB	ECON	FNCT		NORM	% COND
0100	01	2,440	115.5420	109.76	267,814	1978	1978	0	0	0	22.50	77.50

1 SINGLE FAM – 0% - 0 Heated Area: 1777 HX Base Yr

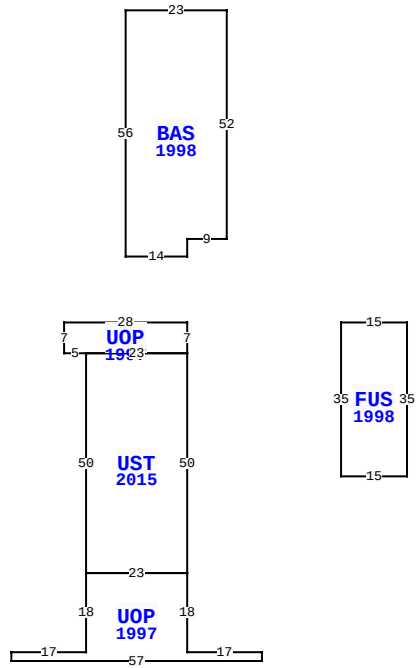

96524 BLACKROCK RD, YULEE

BLD DATE		LGL DATE	
XF DATE		LAND DATE	
INC DATE		AG DATE	

NASSAU COUNTY PROPERTY — VALUATION SUMMARY

VALUATION BY	STANDARD
Tax Group: 4	Tax Dist:
BUILDING MARKET VALUE	532,365
TOTAL MARKET OB/XF VALUE	54,773
TOTAL LAND VALUE - MARKET	1,016,000
TOTAL MARKET VALUE	1,603,138
SOH/AGL Deduction	525,852
ASSESSED VALUE	1,077,286
TOTAL EXEMPTION VALUE	0
BASE TAXABLE VALUE	1,077,286
TOTAL JUST VALUE	1,603,138
NCON VALUE	0
INCOME VALUE	
PREVIOUS YEAR MKT VALUE	1,175,276

PERMIT NUM	DESCRIPTION	AMT	ISSUED

SALES DATA

OFF RECORD Number	DATE	TYPE INST	Q / U	V / I	RSN CD	SALE PRICE
2021/1788	12/23/2015	WD	U	I	37	350,000
GRANTOR: COREY WILLIAM DAVID S						
GRANTEE: WDC CORPORATION						
2021/1782	12/23/2015	QC	U	I	11	100
GRANTOR: COREY WILLIAM E & JAN						
GRANTEE: COREY WILLIAM DAVID						

BUILDING NOTES

BUILDING DIMENSIONS

UOP=[YR=1997] W28 S7 E5 UST=[YR=2015] S50 UOP=[YR=1997] S18 W17 S2 E57 N2 W17 N18 W23 $ E23 N50 W23 $ E23 N7 $ PTR= E35 FUS=[YR=1998] E15 S35 W15 N35 $ W35 $ PTR= N15 BAS=[YR=1998] N4 E9 N52 W23 S56 E14 $ S15 $.

EXTRA FEATURES

LN	OB/XF CODE	DESCRIPTION	BLD	CAP	L	W	UNITS	UT	Adj R	ADJ UNIT PRICE	ORIG COND	YEAR ON	YEAR ACTUAL	Q	% COND	OB/XF MKT VALUE	NOTES
1	0812	CONCRETE C	0	0	0	0	2,810.00	SF	4.00	4.00	100	1980	1980	3	32.5	3,653	
2	0300	BOAT DCK W	0	0	0	0	1,350.00	SF	40.00	40.00	100	2000	2000	3	28	15,120	
3	0303	FLT DOCK W	0	0	10	20	200.00	SF	26.00	26.00	100	2017	2017	3	84	4,368	
4	0310	AL GANG WY	0	0	0	0	20.00	LF	115.00	115.00	100	2017	2017	3	78	1,794	
5	0820	WOOD WALK	0	0	0	0	207.00	SF	11.75	11.75	100	1985	1985	3	40	973	
6	0920	CWALL-WD/M	0	0	0	0	137.00	LF	390.00	390.00	100	1980	1980	3	20	10,686	
7	0350	CARPORT WD	0	0	16	24	384.00	SF	13.00	13.00	100	1980	1980	3	20	998	
8	0810	CONCRETE A	0	0	7	4	28.00	SF	6.50	6.50	100	1990	1990	3	59.5	108	
9	1242	WD DECK A	0	0	0	0	244.00	SF	10.00	10.00	100	1998	1998	3	20	488	
10	0810	CONCRETE A	0	0	0	0	476.00	SF	6.50	6.50	100	1980	1980	3	32.5	1,006	

TOTAL OB/XF 39,194

LAND DESCRIPTION

LN	USE CODE	CLS	LAND USE DESCRIPTION	CAP	RD	LOC ZONE	FRONT	DEPTH	TOT LND UTS	UNIT TYPE	DT	DPTH FACT	% COND	TOT ADJ	UNIT PRICE	ADJ UNIT PRICE	LAND VALUE	OTHER ADJUSTMENTS AND NOTES	YEAR	DENSITY	DECL	FRZ	YR	CONSRV
1	000130	C	SFR WATER	0		RSF-1	0.00	0.00	5.08	AC		1.00	1.00	1.00	200,000.00	200,000.00	1,016,000							

REVIEW DATE 05/05/2022 BY KWA Total Acres: 5.08 Total Land Value: 1,016,000 Market: 0 Agricultural: 0 Common: 1,016,000 PRINTED 08/06/2024 BY SYS

PT OF THE WILLIAM CHRISTOPHER
IN SEC 50-3N-28E
IN OR 2021/1788

WDC CORPORATION
ATTN: GENERAL COUNSEL, 225 COREY CENTER
ATLANTA, GA 30312

2024

50-3N-28-0000-0045-0000

BUILDING CHARACTERISTICS

ELEMENT	CD	CONSTRUCTION
Exterior Wall	12	CEDAR 100
Roof Structur	02	SHED 100
Roof Cover	12	MODULAR MT 100
Interior Wall	02	WALL BD/WD 50
Interior Wall	04	PLYWOOD 50
Interior Floo	14	CARPET 100
Air Condition	03	CENTRAL 100
Heating Type	04	AIR DUCTED 100
Bedrooms		2 100
Bathrooms		2 100
Frame	02	WOOD FRAME 100
Stories	1.	1. 100
Units		0 100
BUD8 Adjustme	04	DIST 01 100
Occupancy	00	NONE 100
Quality	01	Quality Level 01
DOR CODE	0100	SINGLE FAMILY
MAP NUM		MKT AREA 04
NEIGHBORHOOD/LOC	4031.00	

AREA TYPE	TOTAL GROSS AREA	PCT OF BASE	TOT ADJ AREA	SUBAREA MARKET VALUE
BAS	1,411	100	1,411	99,129
DCK	180	10	18	1,265
UCP	318	20	64	4,496
UOP	45	20	9	632
UOP	432	20	86	6,042
UST	18	45	8	562
TOTALS	2,404		1,596	112,126

MARKET ADJUSTMENTS

TYPE	MDL	EFF. AREA	TOT ADJ PTS	EFF. BASE RATE	REPL. COST NEW	AYB	EYB	ECON	FNCT		NORM	% COND
0100	01	1,596	97.3080	92.44	147,534	1970	1975	0	0	0	24.00	76.00

3 SINGLE FAM – 0% - 0 Heated Area: 1411 HX Base Yr

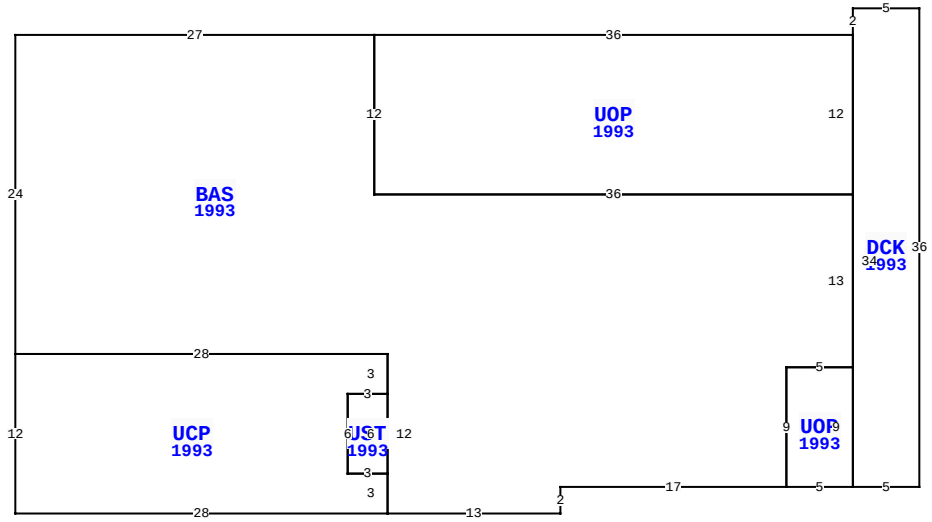

96524 BLACKROCK RD, YULEE

BLD DATE		LGL DATE	
XF DATE		LAND DATE	
INC DATE		AG DATE	

NASSAU COUNTY PROPERTY

PAGE 2 of 5 4

VALUATION SUMMARY

VALUATION BY	STANDARD
Tax Group: 4	Tax Dist:
BUILDING MARKET VALUE	532,365
TOTAL MARKET OB/XF VALUE	54,773
TOTAL LAND VALUE - MARKET	1,016,000
TOTAL MARKET VALUE	1,603,138
SOH/AGL Deduction	525,852
ASSESSED VALUE	1,077,286
TOTAL EXEMPTION VALUE	0
BASE TAXABLE VALUE	1,077,286
TOTAL JUST VALUE	1,603,138
NCON VALUE	0
INCOME VALUE	
PREVIOUS YEAR MKT VALUE	1,175,276

PERMIT NUM	DESCRIPTION	AMT	ISSUED

SALES DATA

OFF RECORD Number	DATE	TYPE INST	Q U	V I	RSN CD	SALE PRICE
2021/1788	12/23/2015	WD	U	I	37	350,000
GRANTOR: COREY WILLIAM DAVID S						
GRANTEE: WDC CORPORATION						
2021/1782	12/23/2015	QC	U	I	11	100
GRANTOR: COREY WILLIAM E & JAN						
GRANTEE: COREY WILLIAM DAVID						

BUILDING NOTES

BUILDING DIMENSIONS

DCK=[YR=1993] W5 S2 UOP=[YR=1993] W36 BAS=[YR=1993] W27 S24 UCP=[YR=1993] S12 E28 N3 UST=[YR=1993] N6 W3 S6 E3$ W3 N6 E3 N3 W28$ E28 S12 E13 N2 E17 UOP=[YR=1993] E5 N9 W5 S9$ N9 E5 N13 W36 N12$ S12 E36 N12$ S34 E5 N36$.

EXTRA FEATURES

LN	OB/XF CODE	DESCRIPTION	BLD	CAP	L	W	UNITS	UT	Adj R	ADJ UNIT PRICE	ORIG COND	YEAR ON	YEAR ACTUAL	Q	% COND	OB/XF MKT VALUE	NOTES
11	0920	CWALL-WD/M	0	0	0	0	105.00	LF	390.00	390.00	100	1980	1980	3	20	8,190	
12	0810	CONCRETE A	0	0	5	39	195.00	SF	6.50	6.50	100	2000	2000	3	79	1,001	
13	0350	CARPORT WD	0	0	45	14	630.00	SF	13.00	13.00	100	2017	2017	3	78	6,388	

LAND DESCRIPTION

TOTAL OB/XF 15,579

LN	USE CODE	CLS	LAND USE DESCRIPTION	CAP	RD	LOC ZONE	FRONT	DEPTH	TOT LND UTS	UNIT TYPE	DT	DPTH FACT	% COND	TOT ADJ	UNIT PRICE	ADJ UNIT PRICE	LAND VALUE	OTHER ADJUSTMENTS AND NOTES	YEAR	DENSITY	DECL	FRZ	YR	CONSRV

REVIEW DATE 05/05/2022 BY KWA Total Acres: 5.08 Total Land Value: 1,016,000 Market: 0 Agricultural: 0 Common: 1,016,000 PRINTED 08/06/2024 BY SYS

PT OF THE WILLIAM CHRISTOPHER
IN SEC 50-3N-28E
IN OR 2021/1788

WDC CORPORATION
ATTN: GENERAL COUNSEL, 225 COREY CENTER
ATLANTA, GA 30312

2024

50-3N-28-0000-0045-0000

NASSAU COUNTY PROPERTY

BUILDING CHARACTERISTICS

ELEMENT	CD	CONSTRUCTION
Exterior Wall	12	CEDAR 100
Roof Structur	03	GABLE/HIP 100
Roof Cover	12	MODULAR MT 100
Interior Wall	02	WALL BD/WD 100
Interior Floo	01	NONE 80
Interior Floo	03	CONC FINSH 20
Air Condition	01	NONE 100
Heating Type	01	NONE 100
Bedrooms		0 100
Bathrooms		0 100
Frame	02	WOOD FRAME 100
Stories	1.	1. 100
Units		0 100
Occupancy	00	NONE 100
Quality	05	Quality Level 05
DOR CODE	0100	SINGLE FAMILY
MAP NUM		MKT AREA 04
NEIGHBORHOOD/LOC	4031.00	

AREA TYPE	TOTAL GROSS AREA	PCT OF BASE	TOT ADJ AREA	SUBAREA MARKET VALUE
BAS	448	100	448	6,604
TOTALS	448		448	6,604

MARKET ADJUSTMENTS

TYPE	MDL	EFF. AREA	TOT ADJ PTS	EFF. BASE RATE	REPL. COST NEW	AYB	EYB	ECON	FNCT		NORM	% COND
6500	01	448	84.2160	29.48	13,207	1980	1980	0	0	0	50.00	50.00

4 GARAGE RES – 0% - 0 Heated Area: 448 HX Base Yr

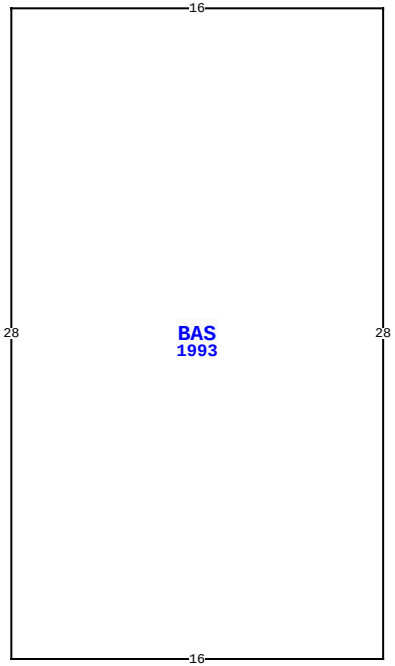

96524 BLACKROCK RD, YULEE

BLD DATE		LGL DATE	
XF DATE		LAND DATE	
INC DATE		AG DATE	

NASSAU COUNTY PROPERTY — VALUATION SUMMARY

VALUATION BY	STANDARD
Tax Group: 4	Tax Dist:
BUILDING MARKET VALUE	532,365
TOTAL MARKET OB/XF VALUE	54,773
TOTAL LAND VALUE - MARKET	1,016,000
TOTAL MARKET VALUE	1,603,138
SOH/AGL Deduction	525,852
ASSESSED VALUE	1,077,286
TOTAL EXEMPTION VALUE	0
BASE TAXABLE VALUE	1,077,286
TOTAL JUST VALUE	1,603,138
NCON VALUE	0
INCOME VALUE	
PREVIOUS YEAR MKT VALUE	1,175,276

PERMIT NUM	DESCRIPTION	AMT	ISSUED

SALES DATA

OFF RECORD Number	DATE	TYPE INST	Q / U	V / I	RSN CD	SALE PRICE
2021/1788	12/23/2015	WD	U	I	37	350,000
GRANTOR: COREY WILLIAM DAVID S						
GRANTEE: WDC CORPORATION						
2021/1782	12/23/2015	QC	U	I	11	100
GRANTOR: COREY WILLIAM E & JAN						
GRANTEE: COREY WILLIAM DAVID						

BUILDING NOTES

BUILDING DIMENSIONS

BAS=[YR=1993] W16 S28 E16 N28$.

EXTRA FEATURES

LN	OB/XF CODE	DESCRIPTION	BLD	CAP	L	W	UNITS	UT	Adj R	ADJ UNIT PRICE	ORIG COND	YEAR ON	YEAR ACTUAL	Q	% COND	OB/XF MKT VALUE	NOTES

LAND DESCRIPTION

TOTAL OB/XF 0

LN	USE CODE	CLS	LAND USE DESCRIPTION	CAP	RD	LOC ZONE	FRONT	DEPTH	TOT LND UTS	UNIT TYPE	DT	DPTH FACT	% COND	TOT ADJ	UNIT PRICE	ADJ UNIT PRICE	LAND VALUE	OTHER ADJUSTMENTS AND NOTES	YEAR	DENSITY	DECL	FRZ	YR	CONSRV

REVIEW DATE 05/05/2022 BY KWA Total Acres: 5.08 Total Land Value: 1,016,000 Market: 0 Agricultural: 0 Common: 1,016,000 PRINTED 08/06/2024 BY SYS

PT OF THE WILLIAM CHRISTOPHER
IN SEC 50-3N-28E
IN OR 2021/1788

WDC CORPORATION
ATTN: GENERAL COUNSEL, 225 COREY CENTER
ATLANTA, GA 30312

2024

50-3N-28-0000-0045-0000

NASSAU COUNTY PROPERTY

BUILDING CHARACTERISTICS

ELEMENT	CD	CONSTRUCTION
Exterior Wall	12	CEDAR 100
Roof Structur	03	GABLE/HIP 100
Roof Cover	12	MODULAR MT 100
Interior Wall	02	WALL BD/WD 100
Interior Floo	14	CARPET 100
Air Condition	03	CENTRAL 100
Heating Type	04	AIR DUCTED 100
Bedrooms		2 100
Bathrooms		3 100
Frame	02	WOOD FRAME 100
Stories	1.	1. 100
Units		0 100
BUD8 Adjustme	04	DIST 01 100
Occupancy	00	NONE 100
Quality	03	Quality Level 03

DOR CODE 0100 SINGLE FAMILY
MAP NUM | MKT AREA 04
NEIGHBORHOOD/LOC 4031.00

AREA TYPE	TOTAL GROSS AREA	PCT OF BASE	TOT ADJ AREA	SUBAREA MARKET VALUE
BAS	1,110	100	1,110	82,538
DCK	20	10	2	148
FSP	294	40	118	8,774
UCP	300	20	60	4,462
TOTALS	1,724		1,290	95,922

MARKET ADJUSTMENTS

TYPE	MDL	EFF. AREA	TOT ADJ PTS	EFF. BASE RATE	REPL. COST NEW	AYB	EYB	ECON	FNCT		NORM	% COND
0100	01	1,290	110.2400	104.73	135,102	1955	1965	0	0	0	29.00	71.00

5 SINGLE FAM – 0% - 0 Heated Area: 1110 HX Base Yr

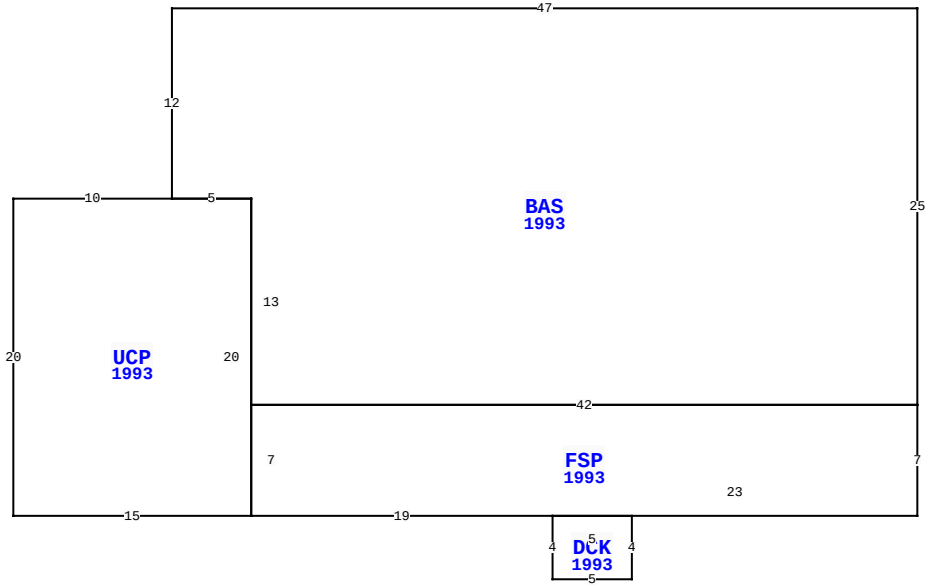

96524 BLACKROCK RD, YULEE

BLD DATE		LGL DATE	
XF DATE		LAND DATE	
INC DATE		AG DATE	

VALUATION SUMMARY

VALUATION BY	STANDARD
Tax Group: 4	Tax Dist:
BUILDING MARKET VALUE	532,365
TOTAL MARKET OB/XF VALUE	54,773
TOTAL LAND VALUE - MARKET	1,016,000
TOTAL MARKET VALUE	1,603,138
SOH/AGL Deduction	525,852
ASSESSED VALUE	1,077,286
TOTAL EXEMPTION VALUE	0
BASE TAXABLE VALUE	1,077,286
TOTAL JUST VALUE	1,603,138
NCON VALUE	0
INCOME VALUE	
PREVIOUS YEAR MKT VALUE	1,175,276

PERMIT NUM	DESCRIPTION	AMT	ISSUED

SALES DATA

OFF RECORD Number	DATE	TYPE INST	Q U /	V I /	RSN CD	SALE PRICE
2021/1788	12/23/2015	WD	U	I	37	350,000
GRANTOR: COREY WILLIAM DAVID S						
GRANTEE: WDC CORPORATION						
2021/1782	12/23/2015	QC	U	I	11	100
GRANTOR: COREY WILLIAM E & JAN						
GRANTEE: COREY WILLIAM DAVID						

BUILDING NOTES

BUILDING DIMENSIONS

BAS=[YR=1993] W47 S12 UCP=[YR=1993] W10 S20 E15
FSP=[YR=1993] E19 DCK=[YR=1993] S4 E5 N4 W5 $ E23 N7 W42 S7 $ N20 W5 $ E5 S13 E42 N25 $.

EXTRA FEATURES

LN	OB/XF CODE	DESCRIPTION	BLD	CAP	L	W	UNITS	UT	Adj R	ADJ UNIT PRICE	ORIG COND	YEAR ON	YEAR ACTUAL	Q	% COND	OB/XF MKT VALUE	NOTES

LAND DESCRIPTION

TOTAL OB/XF 0

LN	USE CODE	CLS	LAND USE DESCRIPTION	CAP	RD	LOC ZONE	FRONT	DEPTH	TOT LND UTS	UNIT TYPE	DT	DPTH FACT	% COND	TOT ADJ	UNIT PRICE	ADJ UNIT PRICE	LAND VALUE	OTHER ADJUSTMENTS AND NOTES	YEAR	DENSITY	DECL	FRZ	YR	CONSRV

REVIEW DATE 05/05/2022 BY KWA Total Acres: 5.08 Total Land Value: 1,016,000 Market: 0 Agricultural: 0 Common: 1,016,000 PRINTED 08/06/2024 BY SYS

PT OF THE WILLIAM CHRISTOPHER
IN SEC 50-3N-28E
IN OR 2021/1788

WDC CORPORATION
ATTN: GENERAL COUNSEL, 225 COREY CENTER
ATLANTA, GA 30312

2024

50-3N-28-0000-0045-0000

NASSAU COUNTY PROPERTY

BUILDING CHARACTERISTICS

ELEMENT	CD	CONSTRUCTION
Exterior Wall	12	CEDAR 50
Exterior Wall	17	CB STUCCO 50
Roof Structur	03	GABLE/HIP 100
Roof Cover	12	MODULAR MT 100
Interior Wall	05	DRYWALL 100
Interior Floo	14	CARPET 100
Air Condition	02	WINDOW 100
Heating Type	01	NONE 100
Bedrooms		3 100
Bathrooms		1 100
Frame	02	WOOD FRAME 100
Stories	2.	2. 100
Units		0 100
BUD8 Adjustme	04	DIST 01 100
Occupancy	00	NONE 100
Quality	03	Quality Level 03

DOR CODE	0100	SINGLE FAMILY	
MAP NUM		MKT AREA	04
NEIGHBORHOOD/LOC	4031.00		

AREA TYPE	TOTAL GROSS AREA	PCT OF BASE	TOT ADJ AREA	SUBAREA MARKET VALUE
BAL	217	15	33	2,233
BAS	537	100	537	36,335
BAS	460	100	460	31,126
FUS	555	100	555	37,553
UOP	217	20	43	2,910
TOTALS	1,986		1,628	110,157

MARKET ADJUSTMENTS

TYPE	MDL	EFF. AREA	TOT ADJ PTS	EFF. BASE RATE	REPL. COST NEW	AYB	EYB	ECON	FNCT		NORM	% COND
0100	01	1,628	96.9000	92.06	149,874	1910	1970	0	0	0	26.50	73.50

6 SINGLE FAM – 0% - 0 Heated Area: 1552 HX Base Yr

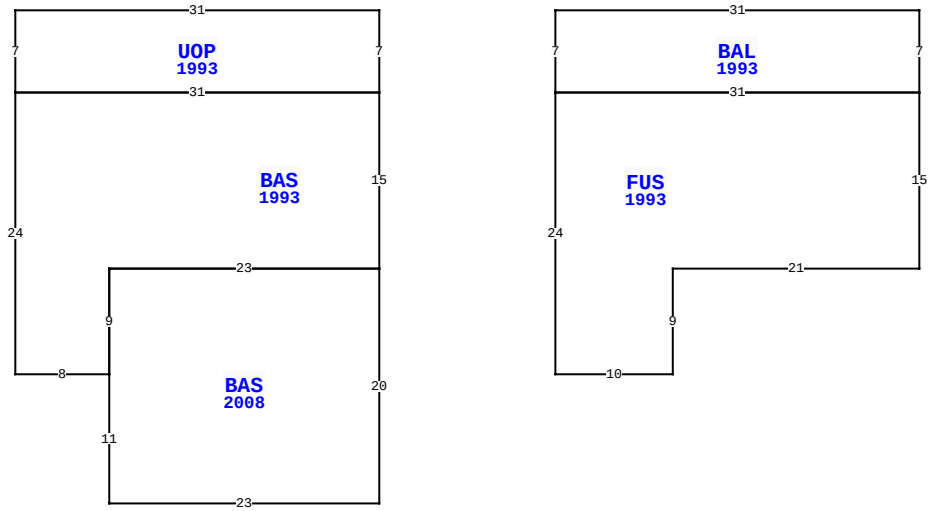

BLD DATE		LGL DATE	
XF DATE		LAND DATE	
INC DATE		AG DATE	

96524 BLACKROCK RD, YULEE

NASSAU COUNTY PROPERTY — VALUATION SUMMARY

VALUATION BY	STANDARD
Tax Group: 4	Tax Dist:
BUILDING MARKET VALUE	532,365
TOTAL MARKET OB/XF VALUE	54,773
TOTAL LAND VALUE - MARKET	1,016,000
TOTAL MARKET VALUE	1,603,138
SOH/AGL Deduction	525,852
ASSESSED VALUE	1,077,286
TOTAL EXEMPTION VALUE	0
BASE TAXABLE VALUE	1,077,286
TOTAL JUST VALUE	1,603,138
NCON VALUE	0
INCOME VALUE	
PREVIOUS YEAR MKT VALUE	1,175,276

PERMIT NUM	DESCRIPTION	AMT	ISSUED

SALES DATA

OFF RECORD Number	DATE	TYPE INST	Q U /	V I /	RSN CD	SALE PRICE
2021/1788	12/23/2015	WD	U	I	37	350,000
GRANTOR: COREY WILLIAM DAVID S						
GRANTEE: WDC CORPORATION						
2021/1782	12/23/2015	QC	U	I	11	100
GRANTOR: COREY WILLIAM E & JAN						
GRANTEE: COREY WILLIAM DAVID						

BUILDING NOTES

BUILDING DIMENSIONS

UOP=[YR=1993] W31 S7 BAS=[YR=1993] S24 E8 BAS=[YR=2008] S11 E23 N20 W23 S9$ N9 E23 N15 W31$ E31 N7$ PTR=E15 BAL=[YR=1993] E31 S7 FUS=[YR=1993] S15 W21 S9 W10 N24 E31$ W31 N7$ W15$.

EXTRA FEATURES

L N	OB/XF CODE	DESCRIPTION	BLD	CAP	L	W	UNITS	UT	Adj R	ADJ UNIT PRICE	ORIG COND	YEAR ON	YEAR ACTUAL	Q	% COND	OB/XF MKT VALUE	NOTES

LAND DESCRIPTION

TOTAL OB/XF 0

L N	USE CODE	CLS	LAND USE DESCRIPTION	CAP	R D	LOC ZONE	FRONT	DEPTH	TOT LND UTS	UNIT TYPE	D T	DPTH FACT	% COND	TOT ADJ	UNIT PRICE	ADJ UNIT PRICE	LAND VALUE	OTHER ADJUSTMENTS AND NOTES	YEAR	DENSITY	DECL	FRZ	YR	CONSRV

REVIEW DATE 05/05/2022 BY KWA Total Acres: 5.08 Total Land Value: 1,016,000 Market: 0 Agricultural: 0 Common: 1,016,000 PRINTED 08/06/2024 BY SYS