IN OR 1360/1124

HERRERA ALEXANDER D & KIMBERLY
96460 BLACKROCK RD
YULEE, FL 32097

2024

50-3N-28-0000-0042-0080

BUILDING CHARACTERISTICS

ELEMENT	CD	CONSTRUCTION
Exterior Wall	10	ABOVE AVG 100
Roof Structur	08	IRREGULAR 100
Roof Cover	03	COMP SHNGL 100
Interior Wall	05	DRYWALL 100
Interior Floo	12	HARDWOOD 50
Interior Floo	14	CARPET 50
Air Condition	03	CENTRAL 100
Heating Type	04	AIR DUCTED 100
Bedrooms		5 100
Bathrooms		4.5 100
Frame	02	WOOD FRAME 100
Stories	3.	3. 100
Units		0 100
Occupancy	00	NONE 100
Quality	05	Quality Level 05
DOR CODE	0100	SINGLE FAMILY
MAP NUM		MKT AREA 04
NEIGHBORHOOD/LOC	4031.00	

AREA TYPE	TOTAL GROSS AREA	PCT OF BASE	TOT ADJ AREA	SUBAREA MARKET VALUE
BAL	228	15	34	4,263
BAS	960	100	960	120,379
FGR	328	55	180	22,571
FOP	64	30	19	2,382
FOP	288	30	86	10,784
FST	144	55	79	9,907
FUS	600	100	600	75,237
FUS	1,724	100	1,724	216,182
PTO	170	5	8	1,004
STR	78	10	8	1,004
TOTALS	5,197		3,842	481,770

MARKET ADJUSTMENTS

TYPE	MDL	EFF. AREA	TOT ADJ PTS	EFF. BASE RATE	REPL. COST NEW	AYB	EYB	ECON	FNCT		NORM	% COND
0900	01	3,842	113.3550	141.69	544,373	1999	1999	0	0	0	11.50	88.50

1 SNGL FAM – 100% - 2020 Heated Area: 3284 HX Base Yr 2020

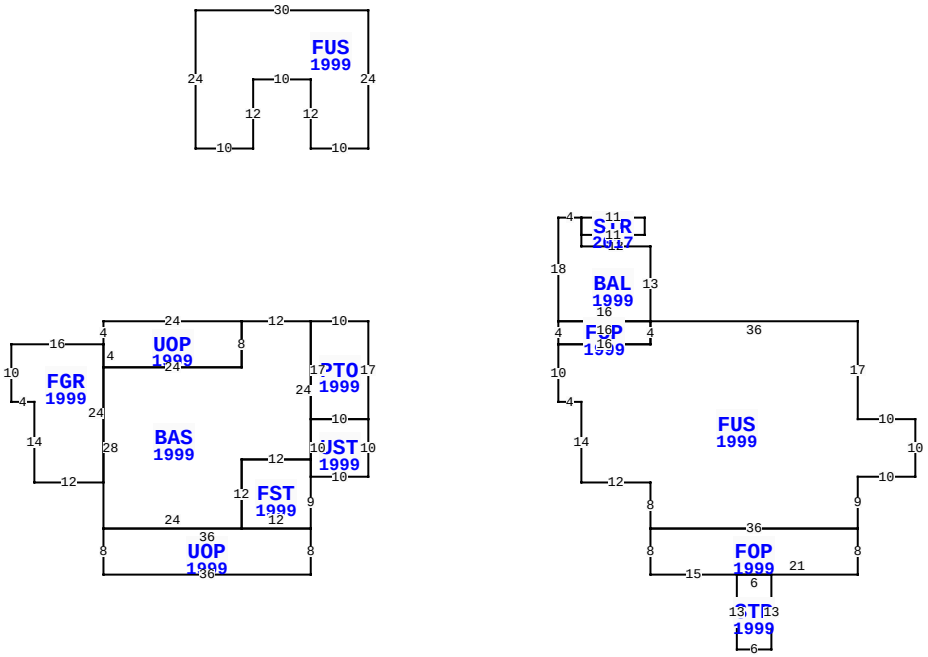

** This building has 14 Sub-Areas

96460 BLACKROCK RD, YULEE

BLD DATE		LGL DATE	
XF DATE		LAND DATE	04/22/2024 MLU
INC DATE		AG DATE	

NASSAU COUNTY PROPERTY

PAGE 1 of 1 4

VALUATION SUMMARY

VALUATION BY		STANDARD
Tax Group: 4	Tax Dist:	
BUILDING MARKET VALUE		481,770
TOTAL MARKET OB/XF VALUE		26,895
TOTAL LAND VALUE - MARKET		270,000
TOTAL MARKET VALUE		778,665
SOH/AGL Deduction		221,855
ASSESSED VALUE		556,810
TOTAL EXEMPTION VALUE	HX HB	50,000
BASE TAXABLE VALUE		506,810
TOTAL JUST VALUE		778,665
NCON VALUE		0
INCOME VALUE		
PREVIOUS YEAR MKT VALUE		764,969

PERMIT NUM	DESCRIPTION	AMT	ISSUED
21016659	ROOF	21,901	12/01/2021
B1909109	DOOR -1	2,437	10/01/2019

SALES DATA

OFF RECORD Number	DATE	TYPE INST	Q / U	V / I	RSN CD	SALE PRICE
1360/1124	10/21/2005	WD	Q	I		825,000
GRANTOR: MCKENZIE PATRICK C &						
GRANTEE: HERRERA ALEXANDER D						
0831/1651	4/29/1998	WD	Q	V		116,900
GRANTOR: RUEBUSH ROGER & PATRI						
GRANTEE: MCKENZIE PATRICK &						

BUILDING NOTES

BUILDING DIMENSIONS

PTO=[YR=1999] W10 BAS=[YR=1999] W12 UOP=[YR=1999] W24 S4 FGR=[YR=1999] W16 S10 E4 S14 E12 N24$ S4 E24 N8$ S8 W24 S28 UOP=[YR=1999] S8 E36 N8 FST=[YR=1999] N9 UST=[YR=1999] E10 N10 W10 S10$ N3 W12 S12 E12$ W36$ E24 N12 E12 N24$ S17 E10 N17$ PTR= E85 FUS=[YR=1999] W36 BAL=[YR=1999] N13 W12 N2 STR=[YR=2017] E11 N3 W11 S3$ N3 W4 S18 E16$ FOP=[YR=1999] W16 S4 E16 N4$ S4 W16 S10 E4 S14 E12 S8 FOP=[YR=1999] S8 E15 STR=[YR=1999] S13 E6 N13 W6$ E21 N8 W36$ E36 N9 E10 N10 W10 N17$ W85 $ PTR= N30FUS=[YR=1999] N24 W30 S24 E10 N12 E10 S12 E10 $ S30 $.

EXTRA FEATURES

LN	OB/XF CODE	DESCRIPTION	BLD	CAP	L	W	UNITS	UT	Adj R	ADJ UNIT PRICE	ORIG COND	YEAR ON	YEAR ACTUAL	Q	% COND	OB/XF MKT VALUE	NOTES
1	0811	CONCRETE B	0	100	0	0	1,191.00	SF	5.20	5.20	100	1999	1999	3	77	4,769	
2	0810	CONCRETE A	0	100	16	3	48.00	SF	6.50	6.50	100	1999	1999	3	77	240	
3	0300	BOAT DCK W	0	100	0	0	2,525.00	SF	20.00	20.00	100	1999	1999	3	27	13,635	
4	0303	FLT DOCK W	0	100	30	10	300.00	SF	13.00	13.00	100	1999	1999	3	27	1,053	
5	0310	AL GANG WY	0	100	0	0	20.00	LF	57.50	57.50	100	1999	1999	3	20	230	
6	0317	DCK PLNG W	0	100	0	0	2.00	UT	1,000.00	1,000.00	100	1999	1999	3	20	400	
7	0500	FP-PRE FAB	0	100	0	0	1.00	UT	3,500.00	3,500.00	100	1999	1999	3	83	2,905	
8	0811	CONCRETE B	0	100	0	0	600.00	SF	5.20	5.20	100	2001	2001	3	80	2,496	
9	0350	CARPORT WD	0	100	32	14	448.00	SF	6.50	6.50	100	2000	2000	3	20	582	
10	0350	CARPORT WD	0	100	30	15	450.00	SF	6.50	6.50	100	2000	2000	3	20	585	

TOTAL OB/XF 26,895

LAND DESCRIPTION

LN	USE CODE	CLS	LAND USE DESCRIPTION	CAP	RD	LOC ZONE	FRONT	DEPTH	TOT LND UTS	UNIT TYPE	DT	DPTH FACT	% COND	TOT ADJ	UNIT PRICE	ADJ UNIT PRICE	LAND VALUE	OTHER ADJUSTMENTS AND NOTES	YEAR	DENSITY	DECL	FRZ	YR	CONSRV
1	000130	C	SFR WATER	100		RSF-1	90.00	777.00	90.00	FF		1.00	1.00	1.00	3,000.00	3,000.00	270,000							

REVIEW DATE 05/12/2019 BY KBA Total Acres: 0.00 Total Land Value: 270,000 Market: 0 Agricultural: 0 Common: 270,000 PRINTED 08/06/2024 BY SYS