IN OR 2699/1255
EX 29-38

GRAY ORVILLE & DIANA FAMILY REVOCABLE TRUST/GRAY O
97572 PIRATES POINT RD
YULEE, FL 32097

2024

50-3N-28-0000-0029-0270

BUILDING CHARACTERISTICS

ELEMENT	CD	CONSTRUCTION
Exterior Wall	16	WD FR STUC 100
Roof Structur	03	GABLE/HIP 100
Roof Cover	03	COMP SHNGL 100
Interior Wall	05	DRYWALL 100
Interior Floo	14	CARPET 60
Interior Floo	13	LVT/LAMNT 40
Air Condition	03	CENTRAL 100
Heating Type	04	AIR DUCTED 100
Bedrooms		3 100
Bathrooms		2 100
Frame	02	WOOD FRAME 100
Stories	1.	1. 100
Units		0 100
Occupancy	00	NONE 100
Quality	04	Quality Level 04
DOR CODE	0100	SINGLE FAMILY
MAP NUM		MKT AREA 04
NEIGHBORHOOD/LOC	4031.00	

AREA TYPE	TOTAL GROSS AREA	PCT OF BASE	TOT ADJ AREA	SUBAREA MARKET VALUE
BAS	2,028	100	2,028	252,049
FGR	620	55	341	42,381
FOP	27	30	8	995
FSP	192	40	77	9,570
PTO	160	5	8	995
TOTALS	3,027		2,462	305,988

MARKET ADJUSTMENTS

TYPE	MDL	EFF. AREA	TOT ADJ PTS	EFF. BASE RATE	REPL. COST NEW	AYB	EYB	ECON	FNCT		NORM	% COND
0900	01	2,462	108.6624	135.83	334,413	2006	2006	0	0	0	8.50	91.50

2 SNGL FAM – 0% - 0 Heated Area: 2028 HX Base Yr

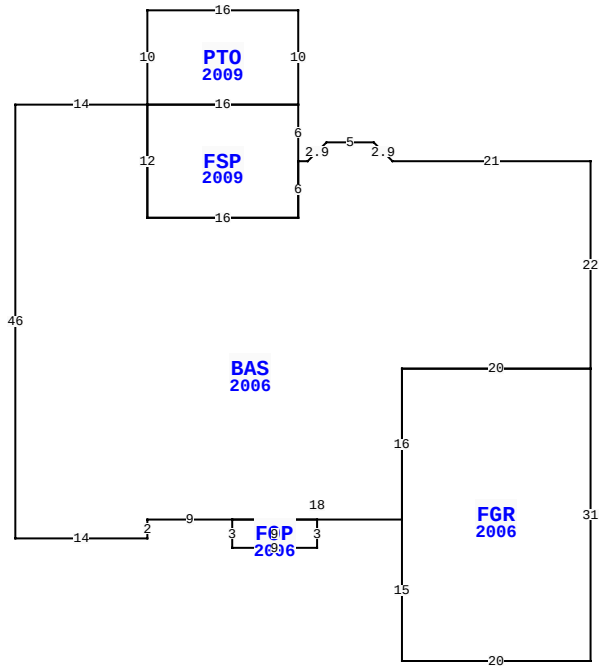

BLD DATE	
XF DATE	
INC DATE	
LGL DATE	
LAND DATE	06/20/2023 MLU
AG DATE	

96386 BLACKROCK RD, YULEE

NASSAU COUNTY PROPERTY

PAGE 1 of 2 4

VALUATION SUMMARY

VALUATION BY	STANDARD
Tax Group: 4	Tax Dist:
BUILDING MARKET VALUE	349,262
TOTAL MARKET OB/XF VALUE	18,888
TOTAL LAND VALUE - MARKET	75,000
TOTAL MARKET VALUE	443,150
SOH/AGL Deduction	56,816
ASSESSED VALUE	386,334
TOTAL EXEMPTION VALUE	0
BASE TAXABLE VALUE	386,334
TOTAL JUST VALUE	443,150
NCON VALUE	0
INCOME VALUE	
PREVIOUS YEAR MKT VALUE	408,269

PERMIT NUM	DESCRIPTION	AMT	ISSUED
P13535	NEW CONSTR	0	12/04/2008
E21375	NEW CONSTR	450	11/01/2008
M14222	H/AC	0	10/01/2008
R11455	REPAIR/RRF	3,000	08/01/2008
B21764	NEW CONSTR	30,500	08/01/2008
E17097	ELEC OTHER	5,500	04/01/2006

SALES DATA

OFF RECORD Number	DATE	TYPE INST	Q / U	V / I	RSN CD	SALE PRICE
2699/1255	3/12/2024	SW	U	I	11	100
GRANTOR: GRAY ORVILLE J & DIAN						
GRANTEE: GRAY ORVILLE & DIAN						
1418/1610	6/08/2006	WD	U	I	07	100
GRANTOR: JOHNSON HOME BUILDERS						
GRANTEE: GRAY ORVILLE J & DI						

BUILDING NOTES

BUILDING DIMENSIONS

BAS=[YR=2006] W21 L2 U2 W5 D2 L2 W1 FSP=[YR=2009] N6 PTO=[YR=2009] N10 W16 S10 E16$ W16 S12 E16 N6$ S6 W16 N12 W14 S46 E14 N2 E9 FOP=[YR=2006] S3 E9 N3 W9 $ E18 FGR=[YR=2006] S15 E20 N31 W20 S16 $ N16 E20 N22 $.

EXTRA FEATURES

LN	OB/XF CODE	DESCRIPTION	BLD	CAP	L	W	UNITS	UT	Adj R	ADJ UNIT PRICE	ORIG COND	YEAR ON	YEAR ACTUAL	Q	% COND	OB/XF MKT VALUE	NOTES
1	0812	CONCRETE C	0	0	0	0	2,298.00	SF	4.00	4.00	100	2006	2006	3	87	7,997	
2	0476	VF 6 SBPL	0	0	0	0	450.00	LF	32.00	32.00	100	2006	2006	3	69	9,936	
3	0463	FENCE GATE	0	0	0	0	1.00	UT	300.00	300.00	100	2006	2006	3	69	207	
4	0351	CARPORT MT	0	0	20	21	420.00	SF	6.60	6.60	100	2006	2006	3	27	748	

LAND DESCRIPTION

TOTAL OB/XF 18,888

LN	USE CODE	CLS	LAND USE DESCRIPTION	CAP	RD	LOC ZONE	FRONT	DEPTH	TOT LND UTS	UNIT TYPE	DT	DPTH FACT	% COND	TOT ADJ	UNIT PRICE	ADJ UNIT PRICE	LAND VALUE	OTHER ADJUSTMENTS AND NOTES	YEAR	DENSITY	DECL	FRZ	YR	CONSRV
1	000100	C	SFR	0		RMH	0.00	0.00	1.00	LT		1.00	1.00	1.00	75,000.00	75,000.00	75,000							

REVIEW DATE 06/03/2024 BY KBA Total Acres: 0.76 Total Land Value: 75,000 Market: 0 Agricultural: 0 Common: 75,000 PRINTED 08/06/2024 BY SYS

IN OR 2699/1255
EX 29-38

GRAY ORVILLE & DIANA FAMILY REVOCABLE TRUST/GRAY O
97572 PIRATES POINT RD
YULEE, FL 32097

2024

50-3N-28-0000-0029-0270

BUILDING CHARACTERISTICS

ELEMENT	CD	CONSTRUCTION
Exterior Wall	16	WD FR STUC 100
Roof Structur	03	GABLE/HIP 100
Roof Cover	03	COMP SHNGL 100
Interior Wall	05	DRYWALL 100
Interior Floo	11	CLAY TILE 100
Air Condition	03	CENTRAL 100
Heating Type	04	AIR DUCTED 100
Bedrooms		1 100
Bathrooms		1 100
Frame	02	WOOD FRAME 100
Stories	1.	1. 100
Units		0 100
Occupancy	00	NONE 100
Quality	02	Quality Level 02

DOR CODE 0100 SINGLE FAMILY
MAP NUM | MKT AREA 04
NEIGHBORHOOD/LOC 4031.00

AREA TYPE	TOTAL GROSS AREA	PCT OF BASE	TOT ADJ AREA	SUBAREA MARKET VALUE
BAS	720	100	720	43,035
PTO	80	5	4	239
TOTALS	800		724	43,274

MARKET ADJUSTMENTS

TYPE	MDL	EFF. AREA	TOT ADJ PTS	EFF. BASE RATE	REPL. COST NEW	AYB	EYB	ECON	FNCT		NORM	% COND
0150	01	724	128.5350	64.27	46,531	2009	2009	0	0	0	7.00	93.00

3 ACCESORY U – 0% - 0 Heated Area: 720 HX Base Yr

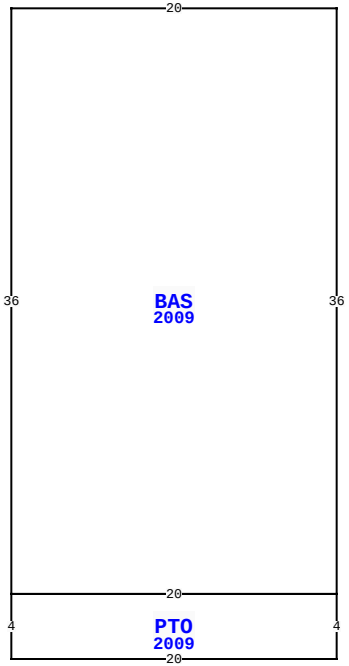

96386 BLACKROCK RD, YULEE

BLD DATE		LGL DATE	
XF DATE		LAND DATE	06/20/2023 MLU
INC DATE		AG DATE	

NASSAU COUNTY PROPERTY

PAGE 2 of 2 4

VALUATION SUMMARY

VALUATION BY	STANDARD
Tax Group: 4	Tax Dist:
BUILDING MARKET VALUE	349,262
TOTAL MARKET OB/XF VALUE	18,888
TOTAL LAND VALUE - MARKET	75,000
TOTAL MARKET VALUE	443,150
SOH/AGL Deduction	56,816
ASSESSED VALUE	386,334
TOTAL EXEMPTION VALUE	0
BASE TAXABLE VALUE	386,334
TOTAL JUST VALUE	443,150
NCON VALUE	0
INCOME VALUE	
PREVIOUS YEAR MKT VALUE	408,269

PERMIT NUM	DESCRIPTION	AMT	ISSUED
B17147	NEW CONSTR	0	03/01/2006
C17147	CO ISSUED	0	03/01/2006
M11205	MECH OTHER	0	03/01/2006
M11206	MECH OTHER	0	03/01/2006
B0617147	NEW CONSTR	0	01/01/2006
971998	MH MOVE-ON	0	10/01/1997

SALES DATA

OFF RECORD Number	DATE	TYPE INST	Q U	V I	RSN CD	SALE PRICE
2699/1255	3/12/2024	SW	U	I	11	100
GRANTOR: GRAY ORVILLE J & DIAN						
GRANTEE: GRAY ORVILLE & DIAN						
1418/1610	6/08/2006	WD	U	I	07	100
GRANTOR: JOHNSON HOME BUILDERS						
GRANTEE: GRAY ORVILLE J & DI						

BUILDING NOTES

BUILDING DIMENSIONS

BAS=[YR=2009] W20 S36 PTO=[YR=2009] S4 E20 N4 W20$ E20 N36$.

EXTRA FEATURES

LN	OB/XF CODE	DESCRIPTION	BLD	CAP	L	W	UNITS	UT	Adj R	ADJ UNIT PRICE	ORIG COND	YEAR ON	YEAR ACTUAL	Q	% COND	OB/XF MKT VALUE	NOTES

LAND DESCRIPTION

TOTAL OB/XF 0

LN	USE CODE	CLS	LAND USE DESCRIPTION	CAP	RD	LOC ZONE	FRONT	DEPTH	TOT LND UTS	UNIT TYPE	DT	DPTH FACT	% COND	TOT ADJ	UNIT PRICE	ADJ UNIT PRICE	LAND VALUE	OTHER ADJUSTMENTS AND NOTES	YEAR	DENSITY	DECL	FRZ	YR	CONSRV

REVIEW DATE 06/03/2024 BY KBA Total Acres: 0.76 Total Land Value: 75,000 Market: 0 Agricultural: 0 Common: 75,000 PRINTED 08/06/2024 BY SYS