IN OR 2139/865

WISE JEFFREY SCOTT & MARY JENNIFER
96538 BLACKROCK RD
YULEE, FL 32097

2024

50-3N-28-0000-0008-0010

NASSAU COUNTY PROPERTY

BUILDING CHARACTERISTICS

ELEMENT	CD	CONSTRUCTION
Exterior Wall	20	FACE BRICK 100
Roof Structur	03	GABLE/HIP 100
Roof Cover	03	COMP SHNGL 100
Interior Wall	05	DRYWALL 100
Interior Floo	11	CLAY TILE 80
Interior Floo	14	CARPET 20
Air Condition	03	CENTRAL 100
Heating Type	04	AIR DUCTED 100
Bedrooms		4 100
Bathrooms		4 100
Frame	02	WOOD FRAME 100
Stories	1.5	1.5 100
Units		0 100
Occupancy	00	NONE 100
Quality	03	Quality Level 03
DOR CODE	0100	SINGLE FAMILY
MAP NUM		MKT AREA 04
NEIGHBORHOOD/LOC	4031.00	

AREA TYPE	TOTAL GROSS AREA	PCT OF BASE	TOT ADJ AREA	SUBAREA MARKET VALUE
BAS	2,895	100	2,895	407,851
FGR	1,030	55	566	79,739
FOP	65	30	20	2,817
FSP	384	40	154	21,696
FST	95	55	52	7,325
FST	100	55	55	7,749
FST	740	55	407	57,339
FUS	940	100	940	132,428
PTO	75	5	4	564
SFB	36	80	29	4,086
TOTALS	6,928		5,221	735,541

MARKET ADJUSTMENTS

TYPE	MDL	EFF. AREA	TOT ADJ PTS	EFF. BASE RATE	REPL. COST NEW	AYB	EYB	ECON	FNCT		NORM	% COND
0500	01	5,221	112.4800	168.72	880,887	2001	2001	0	0	0	16.50	83.50

1 SFR CUST – 0% - 0 Heated Area: 3864 HX Base Yr

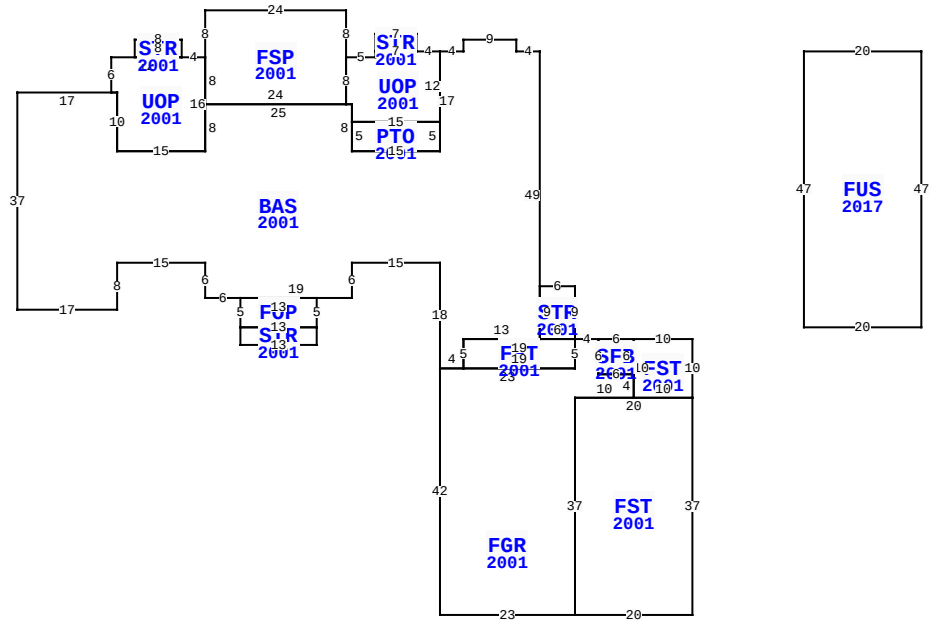

** This building has 16 Sub-Areas

96538 BLACKROCK RD, YULEE

BLD DATE		LGL DATE	
XF DATE		LAND DATE	
INC DATE		AG DATE	

NASSAU COUNTY PROPERTY — VALUATION SUMMARY

VALUATION BY	STANDARD
Tax Group: 4	Tax Dist:
BUILDING MARKET VALUE	832,773
TOTAL MARKET OB/XF VALUE	161,057
TOTAL LAND VALUE - MARKET	754,000
TOTAL MARKET VALUE	1,747,830
SOH/AGL Deduction	236,771
ASSESSED VALUE	1,511,059
TOTAL EXEMPTION VALUE	0
BASE TAXABLE VALUE	1,511,059
TOTAL JUST VALUE	1,747,830
NCON VALUE	0
INCOME VALUE	
PREVIOUS YEAR MKT VALUE	1,537,494

PERMIT NUM	DESCRIPTION	AMT	ISSUED
B2000632	SCRN ENCLSRE	20,000	01/22/2020
B1808102	GARAGE	239,000	08/08/2018
P1706340	REMODEL	0	10/01/2017
B007768	NEW CONSTR	285,000	12/27/2000

SALES DATA

OFF RECORD Number	DATE	TYPE INST	Q / U	V / I	RSN CD	SALE PRICE
2139/0865	8/03/2017	WD	Q	I	01	1,140,000
GRANTOR: BASS WILLIAM W & LIND						
GRANTEE: WISE JEFFREY SCOTT						
0739/1946	9/25/1995	WD	Q	V		150,000
GRANTOR: CAPODILUPO RAPHAEL S						
GRANTEE: BASS WILLIAM W & LI						

BUILDING NOTES

BUILDING DIMENSIONS

BAS=[YR=2001] W4 N2 W9 S2 W4 UOP=[YR=2001] W4 STR=[YR=2001] N3 W7 S3 E7$ W7 S1 W5 FSP=[YR=2001] N8 W24 S8 UOP=[YR=2001] W4 STR=[YR=2001] N3 W8 S3 E8$ W12 S6 E1 S10 E15 N16$ S8 E24 N8$ S8 E1 S3 PTO=[YR=2001] S5 E15 N5 W15$ E15 N12$ S17 W15 N8 W25 S8 W15 N10 W17 S37 E17 N8 E15 S6 E6 FOP=[YR=2001] S5 STR=[YR=2001] S3 E13 N3 W13$ E13 N5 W13$ E19 N6 E15 S18 FGR=[YR=2001] S42 E23 FST=[YR=2001] E20 N37 FST=[YR=2001] N10 W10 SFB=[YR=2001] W6 S6 E6 N6$ S10 E10$ W20 S37$ N37 E10 N4 W6 N6 W4 FST=[YR=2001] W19 S5 E19 N5$ S5 W23$ E4 N5 E13 STR=[YR=2001] E6 N9 W6 S9$ N49$ PTR= E45 FUS=[YR=2017] E20 S47 W20 N47 $W45 $.

EXTRA FEATURES

LN	OB/XF CODE	DESCRIPTION	BLD	CAP	L	W	UNITS	UT	Adj R	ADJ UNIT PRICE	ORIG COND	YEAR ON	YEAR ACTUAL	Q	% COND	OB/XF MKT VALUE	NOTES
1	0300	BOAT DCK W	0	0	0	0	1,335.00	SF	50.00	50.00	100	2012	2012	3	68	45,390	
2	0310	AL GANG WY	0	0	0	0	28.00	LF	115.00	115.00	100	2020	2020	3	90	2,898	
3	0303	FLT DOCK W	0	0	30	10	300.00	SF	26.00	26.00	100	2017	2017	3	84	6,552	
4	1244	WD DECK EX	0	0	16	16	256.00	SF	23.13	23.13	100	2020	2020	3	93	5,506	
5	0323	BOAT LFT H	0	0	0	0	1.00	UT	2,500.00	2,500.00	100	2020	2020	3	90	2,250	
6	0812	CONCRETE C	0	0	0	0	2,145.00	SF	4.00	4.00	100	2001	2001	3	80	6,864	
7	0350	CARPORT WD	0	0	14	36	504.00	SF	13.00	13.00	100	2017	2017	3	78	5,111	
8	0861	POOL GUNIT	0	0	42	10	420.00	SF	85.00	85.00	100	2001	2001	3	27	9,639	
9	0845	KOOL DECK	0	0	0	0	982.00	SF	7.25	7.25	100	2001	2001	3	80	5,696	
10	0911	SCRN RM A	0	0	56	26	1,456.00	SF	14.00	14.00	100	2020	2020	3	90	18,346	

TOTAL OB/XF 108,252

LAND DESCRIPTION

LN	USE CODE	CLS	LAND USE DESCRIPTION	CAP	RD	LOC ZONE	FRONT	DEPTH	TOT LND UTS	UNIT TYPE	DT	DPTH FACT	% COND	TOT ADJ	UNIT PRICE	ADJ UNIT PRICE	LAND VALUE	OTHER ADJUSTMENTS AND NOTES	YEAR	DENSITY	DECL	FRZ	YR	CONSRV
1	000130	C	SFR WATER	0		RSF-1	0.00	0.00	3.77	AC		1.00	1.00	1.00	200,000.00	200,000.00	754,000							

REVIEW DATE 02/08/2021 BY KW Total Acres: 3.77 Total Land Value: 754,000 Market: 0 Agricultural: 0 Common: 754,000 PRINTED 08/06/2024 BY SYS

IN OR 2139/865

WISE JEFFREY SCOTT & MARY JENNIFER
96538 BLACKROCK RD
YULEE, FL 32097

2024

50-3N-28-0000-0008-0010

NASSAU COUNTY PROPERTY

BUILDING CHARACTERISTICS

ELEMENT	CD	CONSTRUCTION
Exterior Wall	25	MOD METAL 100
Roof Structur	10	STEEL FRME 100
Roof Cover	12	MODULAR MT 100
Interior Wall	07	NONE 100
Interior Floo	03	CONC FINSH 100
Air Condition	01	NONE 100
Heating Type	01	NONE 100
Bedrooms		0 100
Bathrooms		0 100
Frame	05	STEEL 100
Stories	1.	1. 100
Units		0 100
Quality	05	Quality Level 05

DOR CODE	0100	SINGLE FAMILY	
MAP NUM		MKT AREA	04
NEIGHBORHOOD/LOC	4031.00		

AREA TYPE	TOTAL GROSS AREA	PCT OF BASE	TOT ADJ AREA	SUBAREA MARKET VALUE
BAS	5,000	100	5,000	97,233
TOTALS	5,000		5,000	97,232

MARKET ADJUSTMENTS

TYPE	MDL	EFF. AREA	TOT ADJ PTS	EFF. BASE RATE	REPL. COST NEW	AYB	EYB	ECON	FNCT		NORM	% COND
6500	11	5,000	58.4800	20.47	102,350	2018	2018	0	0	0	5.00	95.00

2 GARAGE RES – 0% - 0 Heated Area: 5000 HX Base Yr

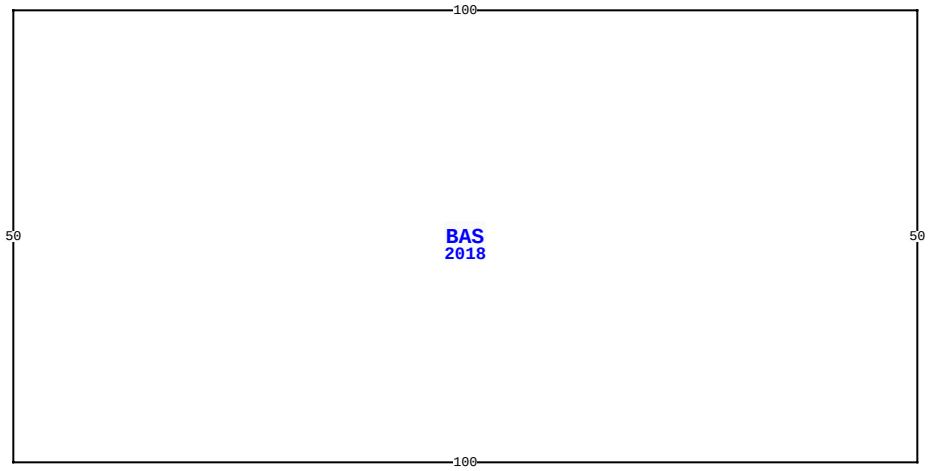

96538 BLACKROCK RD, YULEE

BLD DATE		LGL DATE	
XF DATE		LAND DATE	
INC DATE		AG DATE	

VALUATION SUMMARY

VALUATION BY	STANDARD
Tax Group: 4	Tax Dist:
BUILDING MARKET VALUE	832,773
TOTAL MARKET OB/XF VALUE	161,057
TOTAL LAND VALUE - MARKET	754,000
TOTAL MARKET VALUE	1,747,830
SOH/AGL Deduction	236,771
ASSESSED VALUE	1,511,059
TOTAL EXEMPTION VALUE	0
BASE TAXABLE VALUE	1,511,059
TOTAL JUST VALUE	1,747,830
NCON VALUE	0
INCOME VALUE	
PREVIOUS YEAR MKT VALUE	1,537,494

PERMIT NUM	DESCRIPTION	AMT	ISSUED

SALES DATA

OFF RECORD Number	DATE	TYPE INST	Q / U	V / I	RSN CD	SALE PRICE
2139/0865	8/03/2017	WD	Q	I	01	1,140,000
GRANTOR: BASS WILLIAM W & LIND						
GRANTEE: WISE JEFFREY SCOTT						
0739/1946	9/25/1995	WD	Q	V		150,000
GRANTOR: CAPODILUPO RAPHAEL S						
GRANTEE: BASS WILLIAM W & LI						

BUILDING NOTES

BUILDING DIMENSIONS

BAS=[YR=2018] W100 S50 E100 N50$.

EXTRA FEATURES

LN	OB/XF CODE	DESCRIPTION	BLD	CAP	L	W	UNITS	UT	Adj R	ADJ UNIT PRICE	ORIG COND	YEAR ON	YEAR ACTUAL	Q	% COND	OB/XF MKT VALUE	NOTES
11	0317	DCK PLNG W	0	0	0	0	4.00	UT	1,000.00	1,000.00	100	2017	2017	3	78	3,120	
12	0920	CWALL-WD/M	0	0	0	0	150.00	LF	390.00	390.00	100	2012	2012	3	55	32,175	
13	0855	CONC PAVER	0	0	0	0	590.00	SF	10.00	10.00	100	2012	2012	3	93	5,487	
14	0810	CONCRETE A	0	0	0	0	595.00	SF	6.50	6.50	100	2017	2017	3	97	3,751	
15	0810	CONCRETE A	0	0	30	16	480.00	SF	6.50	6.50	100	2018	2018	3	97	3,026	
16	0810	CONCRETE A	0	0	52	16	832.00	SF	6.50	6.50	100	2018	2018	3	97	5,246	

LAND DESCRIPTION

TOTAL OB/XF 52,805

LN	USE CODE	CLS	LAND USE DESCRIPTION	CAP	RD	LOC ZONE	FRONT	DEPTH	TOT LND UTS	UNIT TYPE	DT	DPTH FACT	% COND	TOT ADJ	UNIT PRICE	ADJ UNIT PRICE	LAND VALUE	OTHER ADJUSTMENTS AND NOTES	YEAR	DENSITY	DECL	FRZ	YR	CONSRV

REVIEW DATE 02/08/2021 BY KW Total Acres: 3.77 Total Land Value: 754,000 Market: 0 Agricultural: 0 Common: 754,000 PRINTED 08/06/2024 BY SYS