LOTS 9 35 36 37
IN OR 1960/759
NORTH YULEE PB 2/26

CHRIST FELLOWSHIP OF NE FL INC
P O BOX 1478
YULEE, FL 32041

2024

50-3N-27-4720-0009-0000

NASSAU COUNTY PROPERTY

BUILDING CHARACTERISTICS

ELEMENT	CD	CONSTRUCTION
Exterior Wall	19	COMMON BRK 80
Exterior Wall	05	AVERAGE 20
Roof Structur	04	WOOD TRUSS 100
Roof Cover	03	COMP SHNGL 100
Interior Wall	05	DRYWALL 100
Interior Floo	14	CARPET 100
Ceiling	01	FIN.SUSPD 100
Air Condition	03	CENTRAL 100
Heating Type	04	AIR DUCTED 100
Fixtures		6 100
Frame	03	MASONRY 100
Story Height		9 100
RMS		4 100
Stories	1.	1. 100
Units		0 100
BUD8 Adjustme	04	DIST 01 100
Occupancy	00	NONE 100
Quality	03	Quality Level 03
DOR CODE	7100	CHURCHES
MAP NUM		MKT AREA 04
NEIGHBORHOOD/LOC	4051.00	

AREA TYPE	TOTAL GROSS AREA	PCT OF BASE	TOT ADJ AREA	SUBAREA MARKET VALUE
BAS	3,580	100	3,580	406,265
FOP	488	30	146	16,568
STP	30	10	3	341
STP	30	10	3	341
STP	36	10	4	454
STP	36	10	4	454
STP	36	10	4	454
TOTALS	4,236		3,744	424,876

MARKET ADJUSTMENTS

TYPE	MDL	EFF. AREA	TOT ADJ PTS	EFF. BASE RATE	REPL. COST NEW	AYB	EYB	ECON	FNCT		NORM	% COND
7101	04	3,744	95.7900	149.91	561,263	1990	1990	0	0	0	24.30	75.70

1 CHURCH – 0% - 0 Heated Area: 3580 HX Base Yr

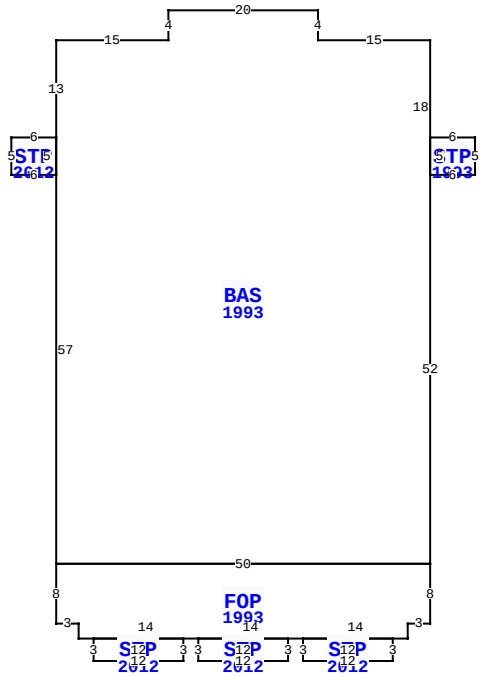

850989 US HWY 17, YULEE

BLD DATE	11/08/2017 KK	LGL DATE	
XF DATE		LAND DATE	04/03/2023 DCA
INC DATE		AG DATE	

VALUATION SUMMARY

VALUATION BY		STANDARD
Tax Group: 4	Tax Dist:	
BUILDING MARKET VALUE		1,704,687
TOTAL MARKET OB/XF VALUE		51,687
TOTAL LAND VALUE - MARKET		391,150
TOTAL MARKET VALUE		2,147,524
SOH/AGL Deduction		697,023
ASSESSED VALUE		1,450,501
TOTAL EXEMPTION VALUE	02	1,450,501
BASE TAXABLE VALUE		0
TOTAL JUST VALUE		2,147,524
NCON VALUE		0
INCOME VALUE		
PREVIOUS YEAR MKT VALUE		2,288,570

PERMIT NUM	DESCRIPTION	AMT	ISSUED
E985025	NEW CONSTR	0	08/04/1998
8682	NEW CONSTR	16,300	02/12/1993
9064	MH MOVE-ON	33,000	10/06/1992
7407	NEW CONSTR	121,600	07/22/1991
5967	NEW CONSTR	78,000	08/30/1989

SALES DATA

OFF RECORD Number	DATE	TYPE INST	Q / U	V / I	RSN CD	SALE PRICE
1960/0759	12/15/2014	WD	U	I	17	520,000
GRANTOR: FLORIDA DISTRICT CHUR						
GRANTEE: CHRIST FELLOWSHIP O						
1470/0626	1/09/2007	WD	U	I	07	100
GRANTOR: NASSAU NAZARENE FELLO						
GRANTEE: NASSAU CHURCH OF TH						

BUILDING NOTES

BUILDING DIMENSIONS

BAS=[YR=1993] W15 N4 W20 S4 W15 S13 STP=[YR=2012] W6 S5 E6 N5$ S57 FOP=[YR=1993] S8 E3 S2 E2 STP=[YR=2012] S3 E12 N3 W12$ E14 STP=[YR=2012] S3 E12 N3 W12$ E14 STP2012 = S3 E12 N3 W12$ E14 N2 E3 N8 W50$ E50 N52 STP=[YR=1993] E6 N5 W6 S5$ N18$.

EXTRA FEATURES

LN	OB/XF CODE	DESCRIPTION	BLD	CAP	L	W	UNITS	UT	Adj R	ADJ UNIT PRICE	ORIG COND	YEAR ON	YEAR ACTUAL	Q	% COND	OB/XF MKT VALUE	NOTES
1	0803	ASPHALT C	0	0	0	0	10,909.00	SF	2.00	2.00	100	1990	1990	3	50	10,909	
2	0100	BAR-B-Q	0	0	0	0	1.00	UT	200.00	200.00	100	1985	1985	3	20	40	
3	0803	ASPHALT C	0	0	0	0	7,904.00	SF	2.00	2.00	100	1994	1994	3	50	7,904	
4	0810	CONCRETE A	0	0	0	0	1,947.00	SF	6.50	6.50	100	1994	1994	3	68	8,606	
5	0812	CONCRETE C	0	0	0	0	1,146.00	SF	4.00	4.00	100	1991	1991	3	62	2,842	
6	0810	CONCRETE A	0	0	13	5	65.00	SF	6.50	6.50	100	1990	1990	3	59.5	251	
7	0402	CONC BUMPE	0	0	0	0	18.00	UT	25.00	25.00	100	1990	1990	3	68	306	
8	0402	CONC BUMPE	0	0	0	0	32.00	UT	25.00	25.00	100	2000	2000	3	84	672	
9	0810	CONCRETE A	0	0	17	5	85.00	SF	6.50	6.50	100	1990	1990	3	59.5	329	
10	0819	CONC 12"	0	0	18	9	162.00	SF	9.50	9.50	100	1990	1990	3	59.5	916	

TOTAL OB/XF 32,775

LAND DESCRIPTION

LN	USE CODE	CLS	LAND USE DESCRIPTION	CAP	RD	LOC ZONE	FRONT	DEPTH	TOT LND UTS	UNIT TYPE	DT	DPTH FACT	% COND	TOT ADJ	UNIT PRICE	ADJ UNIT PRICE	LAND VALUE	OTHER ADJUSTMENTS AND NOTES	YEAR	DENSITY	DECL	FRZ	YR	CONSRV
1	007100	C	CHURCH	0	0004	OR	0.00	0.00	46,600.00	SF		1.00	1.00	1.00	3.00	3.00	139,800							
2	000000	C	VAC RES	0		OR	0.00	0.00	4.57	AC		1.00	1.00	1.00	55,000.00	55,000.00	251,350							

REVIEW DATE 08/23/2022 BY HSA Total Acres: 4.57 Total Land Value: 391,150 Market: 0 Agricultural: 0 Common: 391,150 PRINTED 08/06/2024 BY SYS

LOTS 9 35 36 37
IN OR 1960/759
NORTH YULEE PB 2/26

CHRIST FELLOWSHIP OF NE FL INC
P O BOX 1478
YULEE, FL 32041

2024

50-3N-27-4720-0009-0000

BUILDING CHARACTERISTICS

ELEMENT	CD	CONSTRUCTION
Exterior Wall	25	MOD METAL 100
Roof Structur	10	STEEL FRME 100
Roof Cover	12	MODULAR MT 100
Interior Wall	05	DRYWALL 100
Interior Floo	05	ASPH TILE 50
Interior Floo	14	CARPET 50
Ceiling	02	F.NOT SUS 100
Air Condition	03	CENTRAL 100
Heating Type	04	AIR DUCTED 100
Fixtures		18 100
Frame	05	STEEL 100
Story Height		13 100
RMS		2 100
Stories	1.	1. 100
Units		0 100
Occupancy	00	NONE 100
Quality	03	Quality Level 03
DOR CODE	7100	CHURCHES
MAP NUM		MKT AREA 04
NEIGHBORHOOD/LOC	4051.00	

AREA TYPE	TOTAL GROSS AREA	PCT OF BASE	TOT ADJ AREA	SUBAREA MARKET VALUE
BAS	3,867	100	3,867	513,228
BAS	2,090	100	2,090	277,385
FOP	40	30	12	1,593
FST	108	50	54	7,167
FST	120	50	60	7,963
TOTALS	6,225		6,083	807,336

MARKET ADJUSTMENTS

TYPE	MDL	EFF. AREA	TOT ADJ PTS	EFF. BASE RATE	REPL. COST NEW	AYB	EYB	ECON	FNCT		NORM	% COND
7101	04	6,083	100.9596	158.00	961,114	1991	1991	0	0	0	16.00	84.00

3 CHURCH – 0% - 0 Heated Area: 5957 HX Base Yr

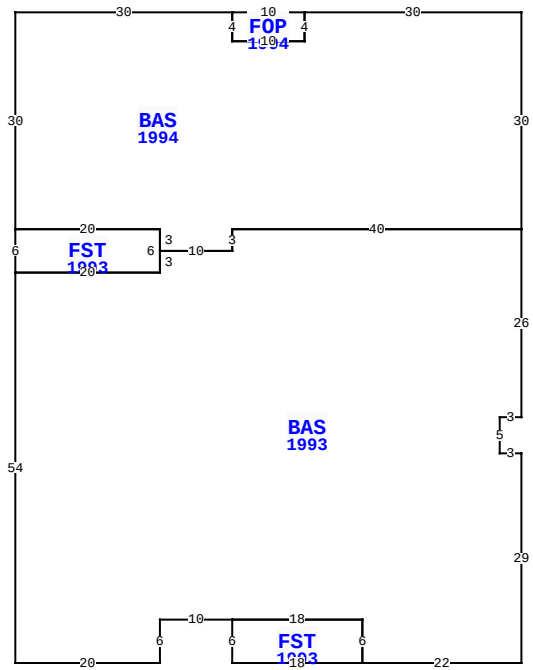

BLD DATE	11/08/2017 KK	LGL DATE	
XF DATE		LAND DATE	04/03/2023 DCA
INC DATE		AG DATE	

850989 US HWY 17, YULEE

NASSAU COUNTY PROPERTY

PAGE 2 of 4 4

VALUATION SUMMARY

VALUATION BY		STANDARD
Tax Group: 4	Tax Dist:	
BUILDING MARKET VALUE		1,704,687
TOTAL MARKET OB/XF VALUE		51,687
TOTAL LAND VALUE - MARKET		391,150
TOTAL MARKET VALUE		2,147,524
SOH/AGL Deduction		697,023
ASSESSED VALUE		1,450,501
TOTAL EXEMPTION VALUE	02	1,450,501
BASE TAXABLE VALUE		0
TOTAL JUST VALUE		2,147,524
NCON VALUE		0
INCOME VALUE		
PREVIOUS YEAR MKT VALUE		2,288,570

PERMIT NUM	DESCRIPTION	AMT	ISSUED

SALES DATA

OFF RECORD Number	DATE	TYPE INST	Q / U	V / I	RSN CD	SALE PRICE
1960/0759	12/15/2014	WD	U	I	17	520,000
GRANTOR: FLORIDA DISTRICT CHUR						
GRANTEE: CHRIST FELLOWSHIP O						
1470/0626	1/09/2007	WD	U	I	07	100
GRANTOR: NASSAU NAZARENE FELLO						
GRANTEE: NASSAU CHURCH OF TH						

BUILDING NOTES

BUILDING DIMENSIONS

BAS=[YR=1994] W30 FOP=[YR=1994] W10 S4 E10 N4$ S4 W10 N4 W30 S30 FST=[YR=1993] S6 BAS=[YR=1993] S54 E20 N6 E10 FST=[YR=1993] S6 E18 N6 W18$ E18 S6 E22 N29 W3 N5 E3 N26 W40 S3 W10 S3 W20$ E20 N6 W20$ E20 S3 E10 N3 E40 N30$.

EXTRA FEATURES

LN	OB/XF CODE	DESCRIPTION	BLD	CAP	L	W	UNITS	UT	Adj R	ADJ UNIT PRICE	ORIG COND	YEAR ON	YEAR ACTUAL	Q	% COND	OB/XF MKT VALUE	NOTES
11	0461	IRON FENCE	0	0	41	3	123.00	SF	8.50	8.50	100	1990	1990	3	68	711	
12	1127	BRICK 8"	0	0	42	2	84.00	SF	11.00	11.00	100	1990	1990	3	86	795	
13	0978	SECURTY LT	0	0	0	0	3.00	UT	450.00	450.00	100	2000	2000	3	52	702	
14	0971	ST LGHT OV	0	0	0	0	2.00	UT	1,555.00	1,555.00	100	2000	2000	3	52	1,617	
15	0972	ST LGHT UN	0	0	0	0	6.00	UT	2,530.00	2,530.00	100	2000	2000	3	52	7,894	
16	0975	ST LT/ARM	0	0	0	0	2.00	UT	500.00	500.00	100	2000	2000	3	52	520	
17	0648	LIGHTS-AV	0	0	0	0	8.00	UT	140.00	140.00	100	2010	2010	3	45	504	
18	0510	GARAGE WD-	0	0	24	16	384.00	SF	35.00	35.00	100	2000	2000	3	28	3,763	
19	4950	BOLLARD	0	0	0	0	4.00	UT	100.00	100.00	100	1993	1993	3	100	400	
20	0351	CARPORT MT	0	0	20	20	400.00	SF	5.90	5.90	100	2000	2000	3	20	472	

TOTAL OB/XF 17,378

LAND DESCRIPTION

LN	USE CODE	CLS	LAND USE DESCRIPTION	CAP	RD	LOC ZONE	FRONT	DEPTH	TOT LND UTS	UNIT TYPE	DT	DPTH FACT	% COND	TOT ADJ	UNIT PRICE	ADJ UNIT PRICE	LAND VALUE	OTHER ADJUSTMENTS AND NOTES	YEAR	DENSITY	DECL	FRZ	YR	CONSRV

REVIEW DATE 08/23/2022 BY HSA Total Acres: 4.57 Total Land Value: 391,150 Market: 0 Agricultural: 0 Common: 391,150 PRINTED 08/06/2024 BY SYS

LOTS 9 35 36 37
IN OR 1960/759
NORTH YULEE PB 2/26

CHRIST FELLOWSHIP OF NE FL INC
P O BOX 1478
YULEE, FL 32041

2024

50-3N-27-4720-0009-0000

NASSAU COUNTY PROPERTY

BUILDING CHARACTERISTICS

ELEMENT	CD	CONSTRUCTION
Exterior Wall	15	CONC BLOCK 100
Roof Structur	04	WOOD TRUSS 100
Roof Cover	03	COMP SHNGL 100
Interior Wall	05	DRYWALL 100
Interior Floo	14	CARPET 100
Ceiling	01	FIN.SUSPD 100
Air Condition	03	CENTRAL 100
Heating Type	04	AIR DUCTED 100
Fixtures		0 100
Frame	01	TYP WD 100
Story Height		8 100
RMS		2 100
Stories	1.	1. 100
Units		0 100
Occupancy	00	NONE 100
Quality	03	Quality Level 03
DOR CODE	7100	CHURCHES
MAP NUM		MKT AREA 04
NEIGHBORHOOD/LOC	4051.00	

AREA TYPE	TOTAL GROSS AREA	PCT OF BASE	TOT ADJ AREA	SUBAREA MARKET VALUE
BAS	900	100	900	104,086
FOP	84	30	25	2,892
TOTALS	984		925	106,978

MARKET ADJUSTMENTS

TYPE	MDL	EFF. AREA	TOT ADJ PTS	EFF. BASE RATE	REPL. COST NEW	AYB	EYB	ECON	FNCT		NORM	% COND
7101	04	925	86.9400	136.06	125,856	1993	1993	0	0	0	15.00	85.00

4 CHURCH – 0% - 0 Heated Area: 900 HX Base Yr

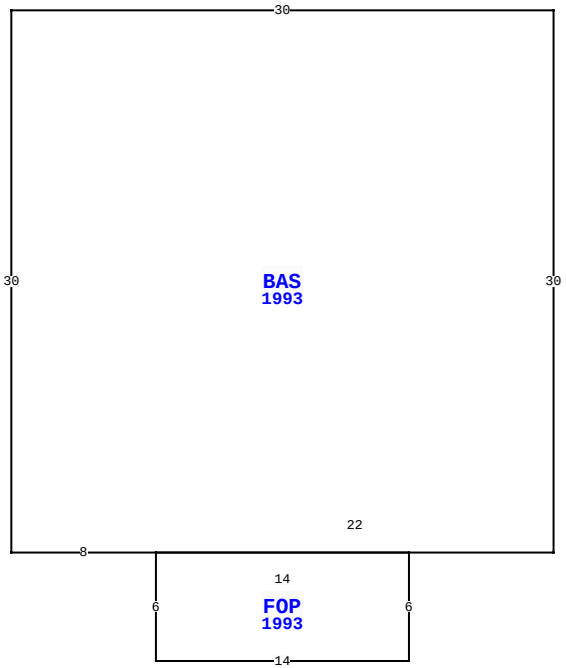

850989 US HWY 17, YULEE

BLD DATE	11/08/2017 KK	LGL DATE	
XF DATE		LAND DATE	04/03/2023 DCA
INC DATE		AG DATE	

VALUATION SUMMARY

VALUATION BY		STANDARD
Tax Group: 4	Tax Dist:	
BUILDING MARKET VALUE		1,704,687
TOTAL MARKET OB/XF VALUE		51,687
TOTAL LAND VALUE - MARKET		391,150
TOTAL MARKET VALUE		2,147,524
SOH/AGL Deduction		697,023
ASSESSED VALUE		1,450,501
TOTAL EXEMPTION VALUE	02	1,450,501
BASE TAXABLE VALUE		0
TOTAL JUST VALUE		2,147,524
NCON VALUE		0
INCOME VALUE		
PREVIOUS YEAR MKT VALUE		2,288,570

PERMIT NUM	DESCRIPTION	AMT	ISSUED

SALES DATA

OFF RECORD Number	DATE	TYPE INST	Q / U	V / I	RSN CD	SALE PRICE
1960/0759	12/15/2014	WD	U	I	17	520,000
GRANTOR: FLORIDA DISTRICT CHUR						
GRANTEE: CHRIST FELLOWSHIP O						
1470/0626	1/09/2007	WD	U	I	07	100
GRANTOR: NASSAU NAZARENE FELLO						
GRANTEE: NASSAU CHURCH OF TH						

BUILDING NOTES

BUILDING DIMENSIONS

BAS=[YR=1993] W30 S30 E8 FOP=[YR=1993] S6 E14 N6 W14$ E22 N30$.

EXTRA FEATURES

LN	OB/XF CODE	DESCRIPTION	BLD	CAP	L	W	UNITS	UT	Adj R	ADJ UNIT PRICE	ORIG COND	YEAR ON	YEAR ACTUAL	Q	% COND	OB/XF MKT VALUE	NOTES
21	0443	STK FNC 6'	0	0	0	0	20.00	LF	10.00	10.00	100	2005	2005	3	24	48	
22	0463	FENCE GATE	0	0	0	0	1.00	UT	300.00	300.00	100	2005	2005	3	66	198	
23	0810	CONCRETE A	0	0	6	6	36.00	SF	6.50	6.50	100	1993	1993	3	66	154	
24	0681	POLE SHED	0	0	10	9	90.00	SF	15.00	15.00	100	2017	2017	3	84	1,134	

LAND DESCRIPTION

TOTAL OB/XF 1,534

LN	USE CODE	CLS	LAND USE DESCRIPTION	CAP	RD	LOC ZONE	FRONT	DEPTH	TOT LND UTS	UNIT TYPE	DT	DPTH FACT	% COND	TOT ADJ	UNIT PRICE	ADJ UNIT PRICE	LAND VALUE	OTHER ADJUSTMENTS AND NOTES	YEAR	DENSITY	DECL	FRZ	YR	CONSRV

REVIEW DATE 08/23/2022 BY HSA Total Acres: 4.57 Total Land Value: 391,150 Market: 0 Agricultural: 0 Common: 391,150 PRINTED 08/06/2024 BY SYS

LOTS 9 35 36 37
IN OR 1960/759
NORTH YULEE PB 2/26

CHRIST FELLOWSHIP OF NE FL INC
P O BOX 1478
YULEE, FL 32041

2024

50-3N-27-4720-0009-0000

NASSAU COUNTY PROPERTY

BUILDING CHARACTERISTICS

ELEMENT	CD	CONSTRUCTION
Exterior Wall	25	MOD METAL 100
Roof Structur	10	STEEL FRME 100
Roof Cover	12	MODULAR MT 100
Interior Wall	05	DRYWALL 100
Interior Floo	14	CARPET 100
Ceiling	01	FIN.SUSPD 100
Air Condition	03	CENTRAL 100
Heating Type	04	AIR DUCTED 100
Fixtures		7 100
Frame	05	STEEL 100
Story Height		9 100
RMS		10 100
Stories	1.	1. 100
Units		0 100
Occupancy	00	NONE 100
Quality	03	Quality Level 03
DOR CODE	7100	CHURCHES
MAP NUM		MKT AREA 04
NEIGHBORHOOD/LOC	4051.00	

AREA TYPE	TOTAL GROSS AREA	PCT OF BASE	TOT ADJ AREA	SUBAREA MARKET VALUE
BAS	3,780	100	3,780	365,497
TOTALS	3,780		3,780	365,497

MARKET ADJUSTMENTS

TYPE	MDL	EFF. AREA	TOT ADJ PTS	EFF. BASE RATE	REPL. COST NEW	AYB	EYB	ECON	FNCT		NORM	% COND
7102	04	3,780	93.8742	103.97	393,007	1999	1999	0	0	0	7.00	93.00

6 EDU RELGUS – 0% - 0 Heated Area: 3780 HX Base Yr

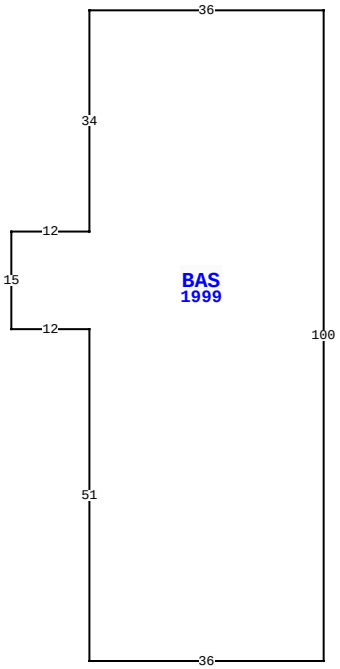

BLD DATE	11/08/2017 KK	LGL DATE	
XF DATE		LAND DATE	04/03/2023 DCA
INC DATE		AG DATE	

850989 US HWY 17, YULEE

VALUATION SUMMARY

VALUATION BY		STANDARD
Tax Group: 4	Tax Dist:	
BUILDING MARKET VALUE		1,704,687
TOTAL MARKET OB/XF VALUE		51,687
TOTAL LAND VALUE - MARKET		391,150
TOTAL MARKET VALUE		2,147,524
SOH/AGL Deduction		697,023
ASSESSED VALUE		1,450,501
TOTAL EXEMPTION VALUE	02	1,450,501
BASE TAXABLE VALUE		0
TOTAL JUST VALUE		2,147,524
NCON VALUE		0
INCOME VALUE		
PREVIOUS YEAR MKT VALUE		2,288,570

PERMIT NUM	DESCRIPTION	AMT	ISSUED

SALES DATA

OFF RECORD Number	DATE	TYPE INST	Q / U	V / I	RSN CD	SALE PRICE
1960/0759	12/15/2014	WD	U	I	17	520,000
GRANTOR: FLORIDA DISTRICT CHUR						
GRANTEE: CHRIST FELLOWSHIP O						
1470/0626	1/09/2007	WD	U	I	07	100
GRANTOR: NASSAU NAZARENE FELLO						
GRANTEE: NASSAU CHURCH OF TH						

BUILDING NOTES

BUILDING DIMENSIONS

BAS=[YR=1999] W36 S34 W12 S15 E12 S51 E36 N100$.

EXTRA FEATURES

L N	OB/XF CODE	DESCRIPTION	BLD	CAP	L	W	UNITS	UT	Adj R	ADJ UNIT PRICE	ORIG COND	YEAR ON	YEAR ACTUAL	Q	% COND	OB/XF MKT VALUE	NOTES

LAND DESCRIPTION

TOTAL OB/XF 0

L N	USE CODE	CLS	LAND USE DESCRIPTION	CAP	R D	LOC ZONE	FRONT	DEPTH	TOT LND UTS	UNIT TYPE	D T	DPTH FACT	% COND	TOT ADJ	UNIT PRICE	ADJ UNIT PRICE	LAND VALUE	OTHER ADJUSTMENTS AND NOTES	YEAR	DENSITY	DECL	FRZ	YR	CONSRV

REVIEW DATE 08/23/2022 BY HSA Total Acres: 4.57 Total Land Value: 391,150 Market: 0 Agricultural: 0 Common: 391,150 PRINTED 08/06/2024 BY SYS