LOT 146
DEL WEBB WILDLIGHT PHASE 2A
OR 2571/536

DELVO KEN & LAEL
760 CONTINUUM LOOP
YULEE, FL 32097

2024

50-3N-27-1004-0146-0000

BUILDING CHARACTERISTICS

ELEMENT	CD	CONSTRUCTION
Exterior Wall	31	HARDIE BRD 100
Roof Structur	03	GABLE/HIP 100
Roof Cover	03	COMP SHNGL 100
Interior Wall	05	DRYWALL 100
Interior Floo	11	CLAY TILE 70
Interior Floo	14	CARPET 30
Air Condition	03	CENTRAL 100
Heating Type	04	AIR DUCTED 100
Bedrooms		2 100
Bathrooms		2 100
Frame	02	WOOD FRAME 100
Stories	1.	1. 100
Units		0 100
Quality	06	Quality Level 06
DOR CODE	0100	SINGLE FAMILY
MAP NUM		MKT AREA 04
NEIGHBORHOOD/LOC	4094.00	

AREA TYPE	TOTAL GROSS AREA	PCT OF BASE	TOT ADJ AREA	SUBAREA MARKET VALUE
BAS	1,802	100	1,802	297,258
FGR	669	55	368	60,705
FOP	144	30	43	7,093
FSP	322	40	129	21,280
TOTALS	2,937		2,342	386,336

MARKET ADJUSTMENTS

TYPE	MDL	EFF. AREA	TOT ADJ PTS	EFF. BASE RATE	REPL. COST NEW	AYB	EYB	ECON	FNCT		NORM	% COND
0900	01	2,342	131.9717	164.96	386,336	2023	2023	0	0	0	0.00	100.00

1 SNGL FAM – 100% - 2024 Heated Area: 1802 HX Base Yr 2024

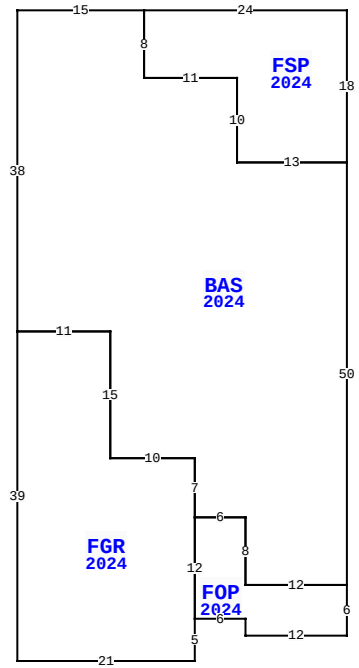

760 CONTINUUM LOOP, YULEE

BLD DATE		LGL DATE	
XF DATE		LAND DATE	06/12/2023 MLU
INC DATE		AG DATE	

NASSAU COUNTY PROPERTY

PAGE 1 of 1 4

VALUATION SUMMARY

VALUATION BY		STANDARD
Tax Group: 4	Tax Dist:	
BUILDING MARKET VALUE		386,336
TOTAL MARKET OB/XF VALUE		2,912
TOTAL LAND VALUE - MARKET		75,000
TOTAL MARKET VALUE		464,248
SOH/AGL Deduction		0
ASSESSED VALUE		464,248
TOTAL EXEMPTION VALUE	HX HB	50,000
BASE TAXABLE VALUE		414,248
TOTAL JUST VALUE		464,248
NCON VALUE		389,248
INCOME VALUE		
PREVIOUS YEAR MKT VALUE		75,000

PERMIT NUM	DESCRIPTION	AMT	ISSUED
230007247	CO ISSUED		06/06/2023
22016654	NEW CONSTR	360,103	11/07/2022

SALES DATA

OFF RECORD Number	DATE	TYPE INST	Q / U	V / I	RSN CD	SALE PRICE
2651/695	6/28/2023	SW	Q	I	01	598,700

GRANTOR: PULTE HOME COMPANY LL

GRANTEE: DELVO KEN & LAEL

BUILDING NOTES

EXTRA FEATURES

LN	OB/XF CODE	DESCRIPTION	BLD	CAP	L	W	UNITS	UT	Adj R	ADJ UNIT PRICE	ORIG COND	YEAR ON	YEAR ACTUAL	Q	% COND	OB/XF MKT VALUE	NOTES
1	0811	CONCRETE B	0	100	0	0	560.00	SF	5.20	5.20	100	2024	2023		100	2,912	

BUILDING DIMENSIONS

BAS=[YR=2024;ORIG=71,-5] E15 S8 E11 S10 E13 S50 W12 N8 W6 N7 W10 N15 W11 N38 $
FSP=[YR=2024;ORIG=110,-5] W24 S8 E11 S10 E13 N18 $
FOP=[YR=2024;ORIG=110,63] W12 N8 W6 S12 E6 S2 E12 N6 $
FGR=[YR=2024;ORIG=71,33] E11 S15 E10 S7 S12 S5 W21 N39 $
.

LAND DESCRIPTION

TOTAL OB/XF 2,912

LN	USE CODE	CLS	LAND USE DESCRIPTION	CAP	RD	LOC ZONE	FRONT	DEPTH	TOT LND UTS	UNIT TYPE	DT	DPTH FACT	% COND	TOT ADJ	UNIT PRICE	ADJ UNIT PRICE	LAND VALUE	OTHER ADJUSTMENTS AND NOTES	YEAR	DENSITY	DECL	FRZ	YR	CONSRV
1	000135	C	SFR CNSVTN	100		PD -	E 0.00	0.00	1.00	LT		1.00	1.00	1.00	75,000.00	75,000.00	75,000							

REVIEW DATE 08/11/2023 BY WW Total Acres: 0.00 Total Land Value: 75,000 Market: 0 Agricultural: 0 Common: 75,000 PRINTED 08/06/2024 BY SYS