LOT 130
DEL WEBB WILDLIGHT PHASE 2A
OR 2571/536

CARNEY REVOCABLE TRUST/CARNEY LANCE M TRUSTEE
244 ETHERAL SQUARE
YULEE, FL 32097

2024

50-3N-27-1004-0130-0000

BUILDING CHARACTERISTICS

ELEMENT	CD	CONSTRUCTION
Exterior Wall	31	HARDIE BRD 100
Roof Structur	03	GABLE/HIP 100
Roof Cover	03	COMP SHNGL 100
Interior Wall	05	DRYWALL 100
Interior Floo	13	LVT/LAMNT 100
Air Condition	03	CENTRAL 100
Heating Type	04	AIR DUCTED 100
Bedrooms		2 100
Bathrooms		2 100
Frame	02	WOOD FRAME 100
Stories	1.	1. 100
Units		0 100
Quality	06	Quality Level 06

DOR CODE 0100 SINGLE FAMILY
MAP NUM | MKT AREA 04
NEIGHBORHOOD/LOC 4094.00

AREA TYPE	TOTAL GROSS AREA	PCT OF BASE	TOT ADJ AREA	SUBAREA MARKET VALUE
BAS	1,932	100	1,932	299,383
FGR	669	55	368	57,025
FOP	144	30	43	6,663
FOP	192	30	58	8,988
TOTALS	2,937		2,401	372,059

MARKET ADJUSTMENTS

TYPE	MDL	EFF. AREA	TOT ADJ PTS	EFF. BASE RATE	REPL. COST NEW	AYB	EYB	ECON	FNCT		NORM	% COND
0900	01	2,401	123.9700	154.96	372,059	2023	2023	0	0	0	0.00	100.00

1 SNGL FAM – 100% - 2024 Heated Area: 1932 HX Base Yr 2024

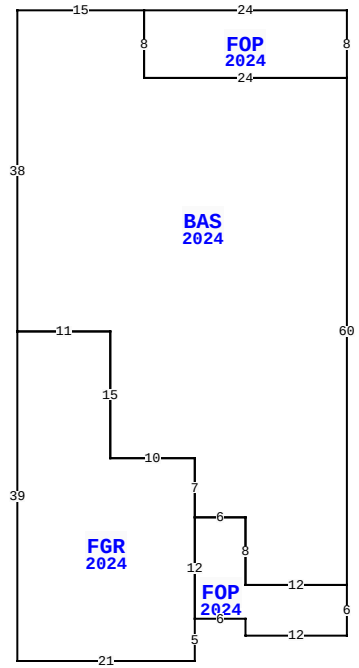

244 ETHEREAL SQ, YULEE

BLD DATE		LGL DATE	
XF DATE		LAND DATE	06/12/2023 MLU
INC DATE		AG DATE	

NASSAU COUNTY PROPERTY

PAGE 1 of 1 4

VALUATION SUMMARY

VALUATION BY		STANDARD
Tax Group: 4	Tax Dist:	
BUILDING MARKET VALUE		372,059
TOTAL MARKET OB/XF VALUE		16,010
TOTAL LAND VALUE - MARKET		97,500
TOTAL MARKET VALUE		485,569
SOH/AGL Deduction		356,505
ASSESSED VALUE		129,064
TOTAL EXEMPTION VALUE	HX HB	50,000
BASE TAXABLE VALUE		79,064
TOTAL JUST VALUE		485,569
NCON VALUE		388,069
INCOME VALUE		
PREVIOUS YEAR MKT VALUE		75,000

PERMIT NUM	DESCRIPTION	AMT	ISSUED
B240004042	24'7 X 11 SCREEN	8,827	04/09/2024
230012537	CO ISSUED		09/28/2023
22018807	NEW CONSTR	377,372	12/27/2022

SALES DATA

OFF RECORD Number	DATE	TYPE INST	Q / U	V / I	RSN CD	SALE PRICE
2676/1942	10/27/2023	SW	Q	I	01	691,300

GRANTOR: PULTE HOME COMPANY LL
GRANTEE: CARNEY REVOCABLE TR

BUILDING NOTES

BUILDING DIMENSIONS

BAS=[YR=2024;ORIG=40,0] E15 S8 E24 S60 W12 N8 W6 N7 W10 N15 W11 N38 $
FOP=[YR=2024;ORIG=79,0] W24 S8 E24 N8 $
FGR=[YR=2024;ORIG=40,38] E11 S15 E10 S7 S12 S5 W21 N39 $
FOP=[YR=2024;ORIG=79,68] W12 N8 W6 S12 E6 S2 E12 N6 $
.

EXTRA FEATURES

LN	OB/XF CODE	DESCRIPTION	BLD	CAP	L	W	UNITS	UT	Adj R	ADJ UNIT PRICE	ORIG COND	YEAR ON	YEAR ACTUAL	Q	% COND	OB/XF MKT VALUE	NOTES
1	0855	CONC PAVER	0	100	0	0	605.00	SF	10.00	10.00	100	2024	2023		100	6,050	
2	0462	ST/AL FNC	1	100	0	0	936.00	SF	10.00	10.00	100	2024	2023		100	9,360	
3	0463	FENCE GATE	1	100	0	0	2.00	UT	300.00	300.00	100	2024	2023		100	600	

LAND DESCRIPTION

TOTAL OB/XF 16,010

LN	USE CODE	CLS	LAND USE DESCRIPTION	CAP	RD	LOC ZONE	FRONT	DEPTH	TOT LND UTS	UNIT TYPE	DT	DPTH FACT	% COND	TOT ADJ	UNIT PRICE	ADJ UNIT PRICE	LAND VALUE	OTHER ADJUSTMENTS AND NOTES	YEAR	DENSITY	DECL	FRZ	YR	CONSRV
1	000135	C	SFR CNSVTN	100		PD -	E 0.00	0.00	1.00	LT		1.00	1.00	1.30	75,000.00	97,500.00	97,500							

REVIEW DATE 07/03/2024 BY WW Total Acres: 0.00 Total Land Value: 97,500 Market: 0 Agricultural: 0 Common: 97,500 PRINTED 08/06/2024 BY SYS